AIWA AR-121

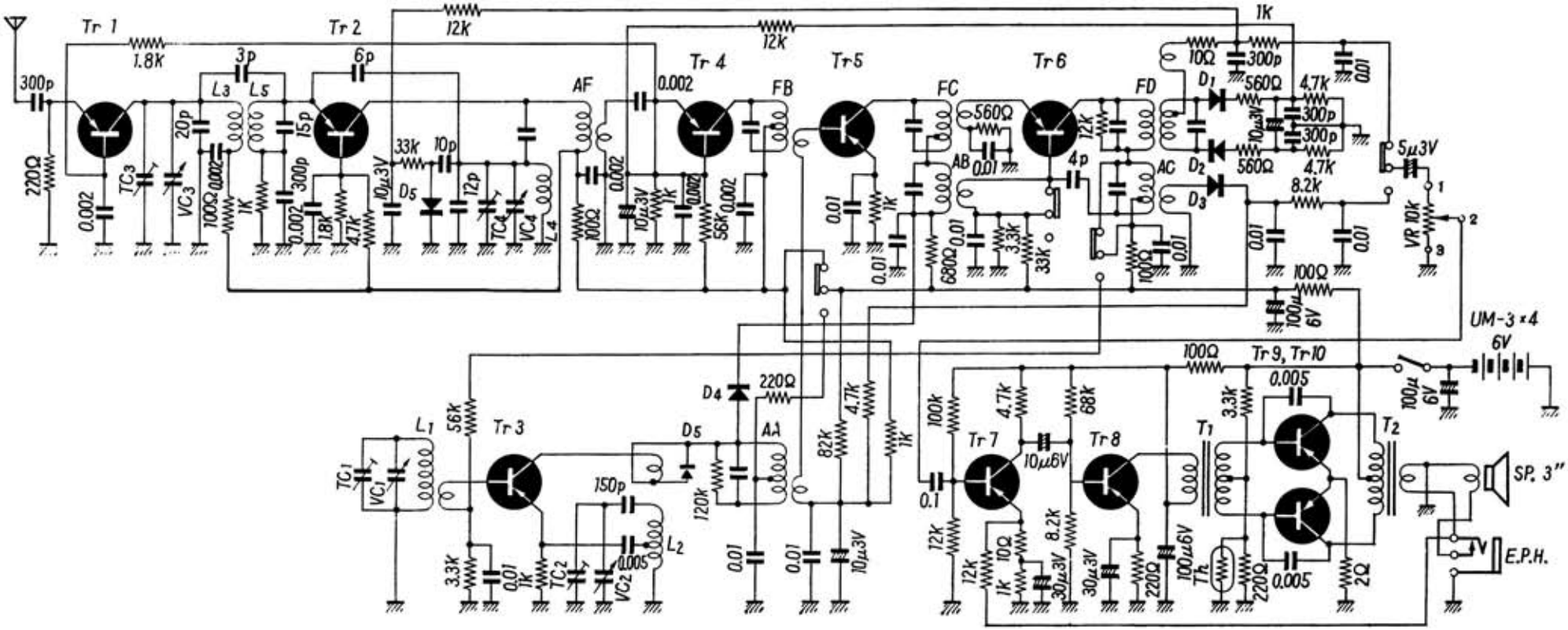

SERVICE DATA