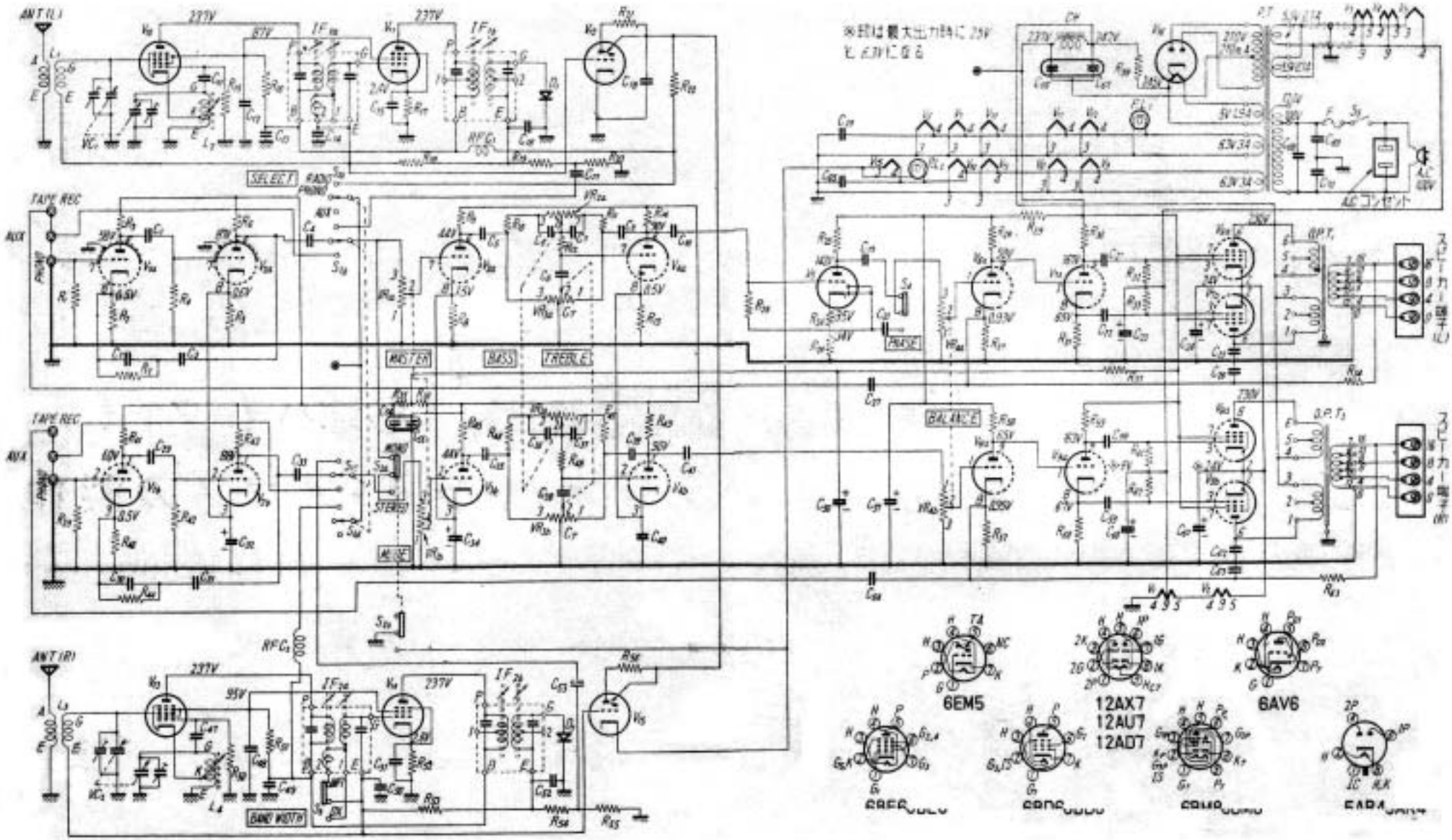
ANT (L)
ANT (R)
SELECT
TAPE REC
AUX
MASTER
BASS
TREBLE
BALANCE
PHASE
STEREO
BAND WIDTH
6EM5
12AX7
12AU7
12AD7
6AV6

STU-707K