Columbia Radio R-621 Wiring Diagram

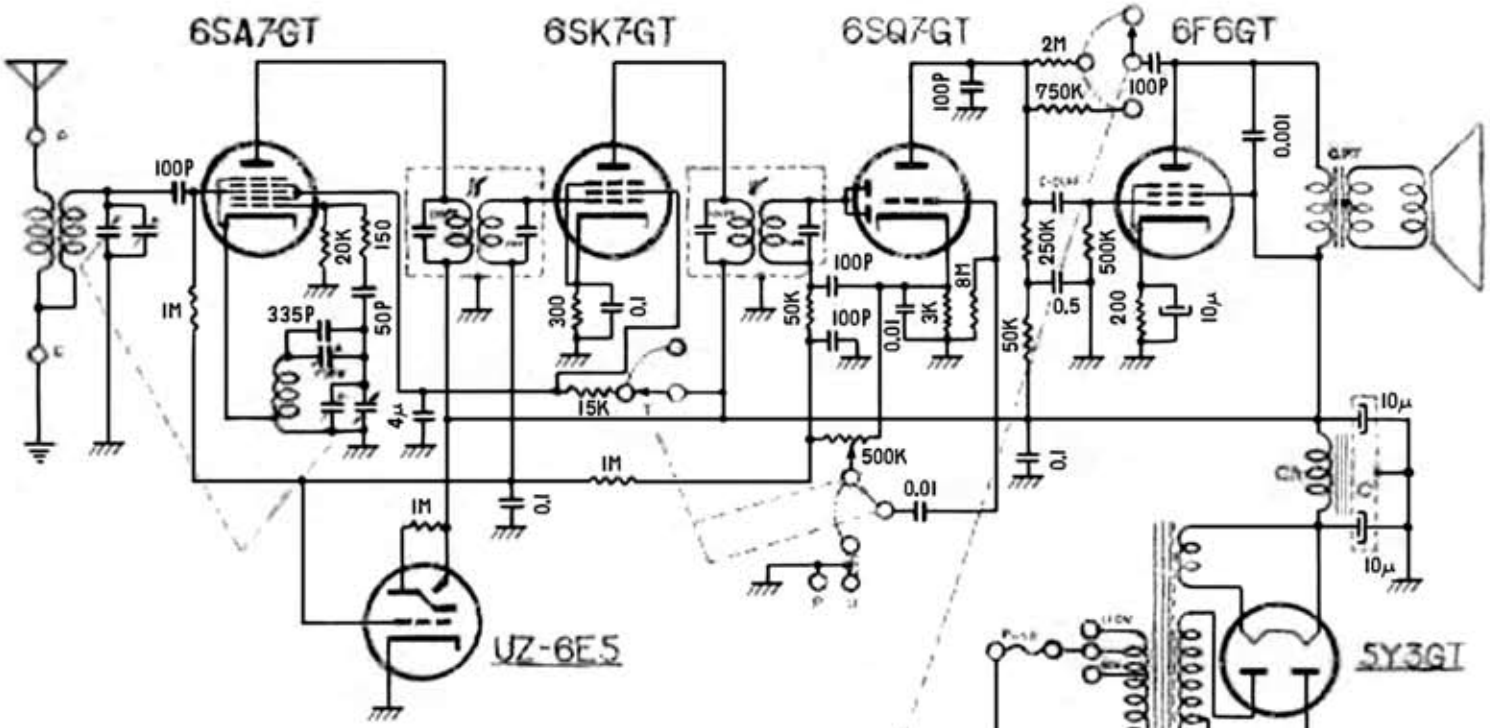

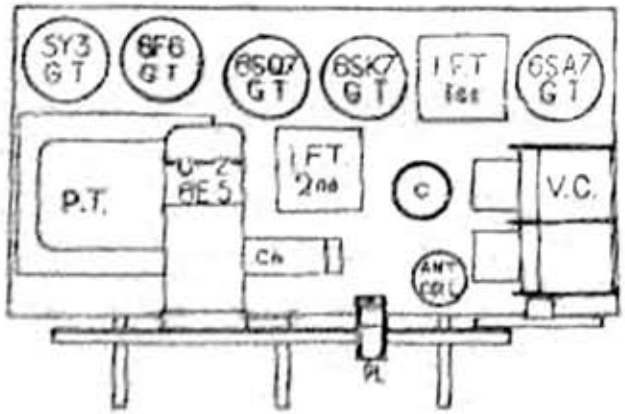

Voltage	A.C.	90-100-110 V.
Cycles		50-60 ~
Power Consumption		45 W.
Undistorted Output		25 W.

NIPPON COLUMBIA CO., LTD. KAWASAKI, JAPAN.

Edit by JA3GZP