Columbia R-66

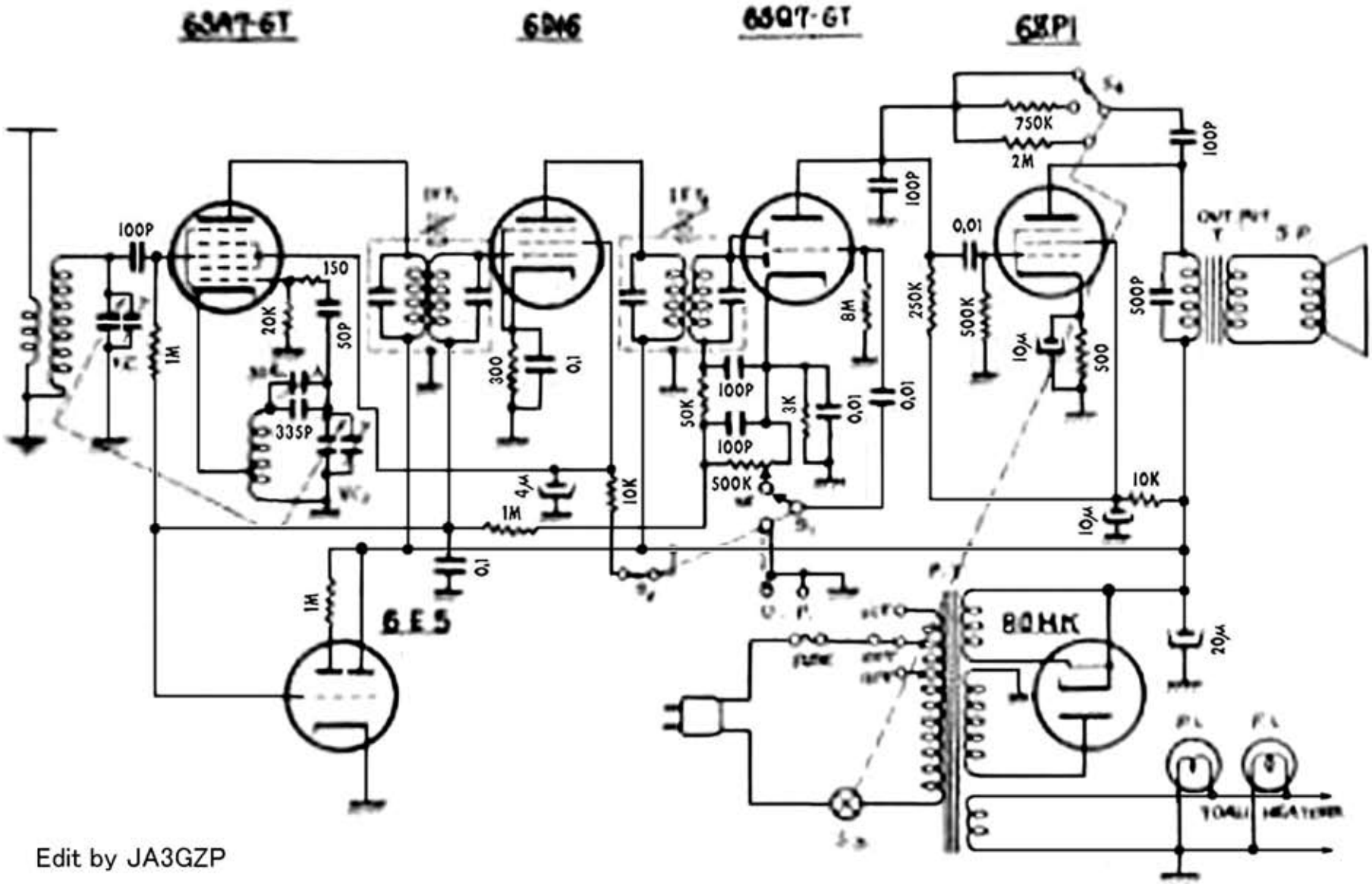

Edit by JA3GZP