Columbia R-720 WIRING DIAGRAM

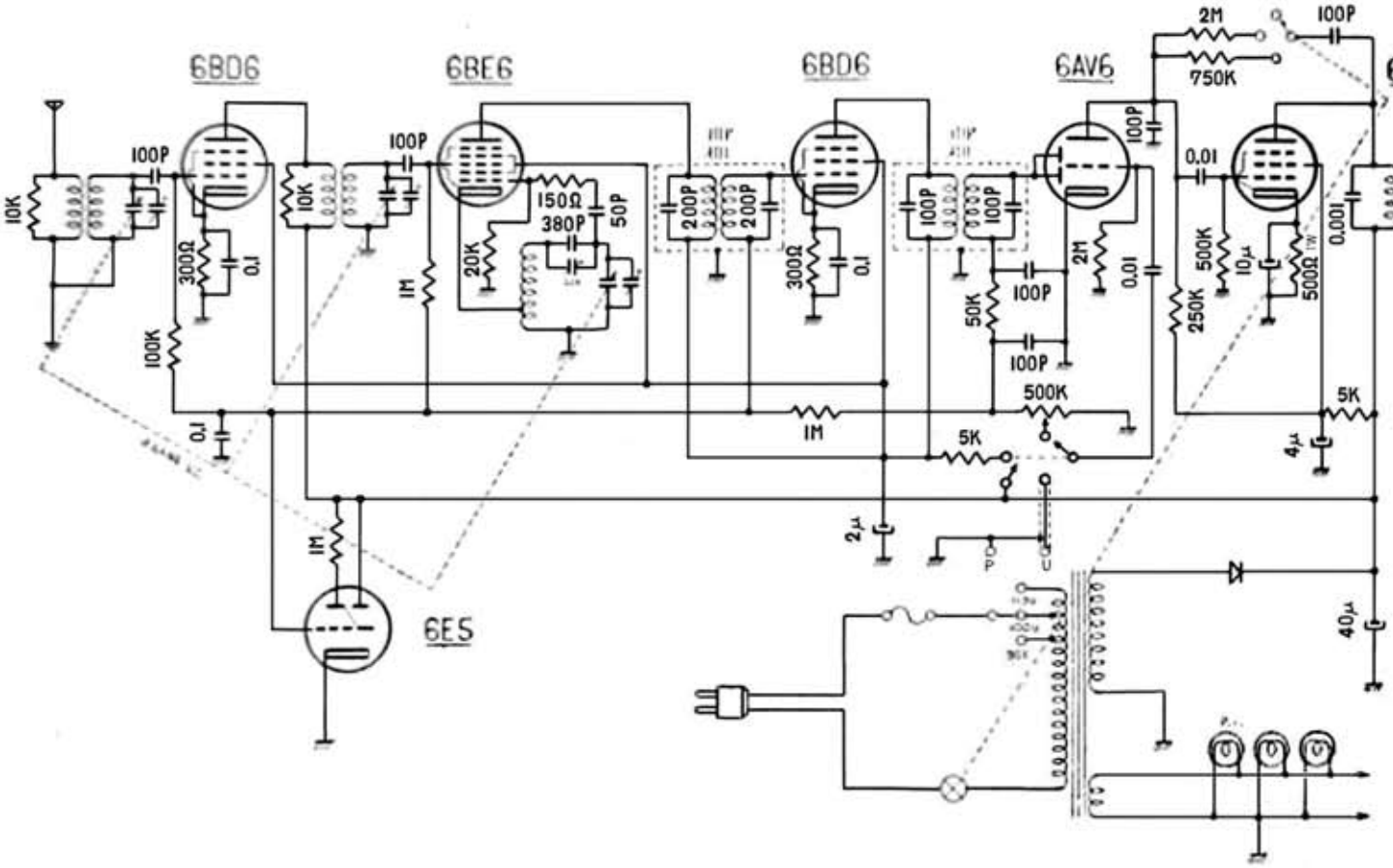

VOLTAGE	90-100-110 V
FREQUENCY	50-60~
POWER CONSUMPTION	48 W
UNDISTORTED OUTPUT	1.5 W

TUBE LOCATION

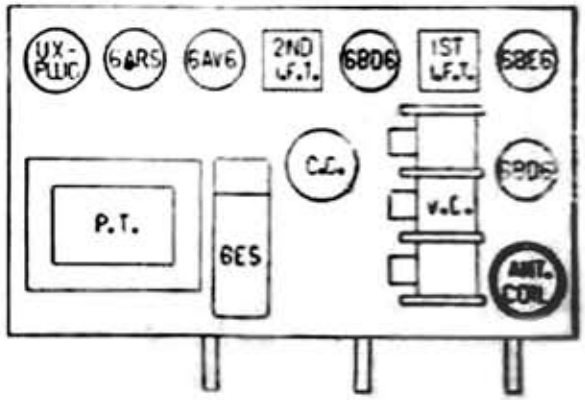

NIPPON COLUMBIA CO., LTD. KAWASAKI, JAPAN.

Edit by JA3GZP