Columbia WIRING DIAGRAM R-723

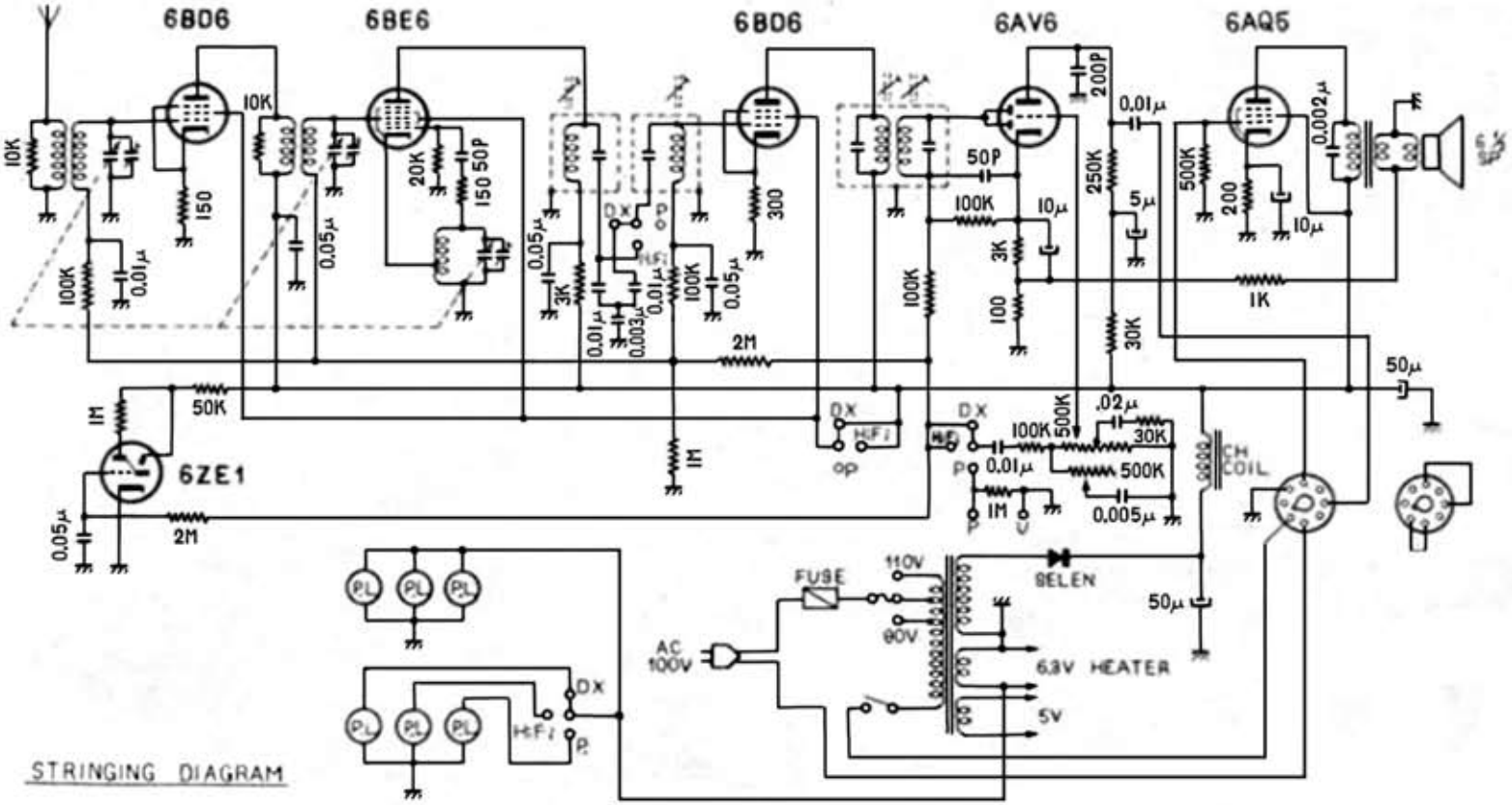

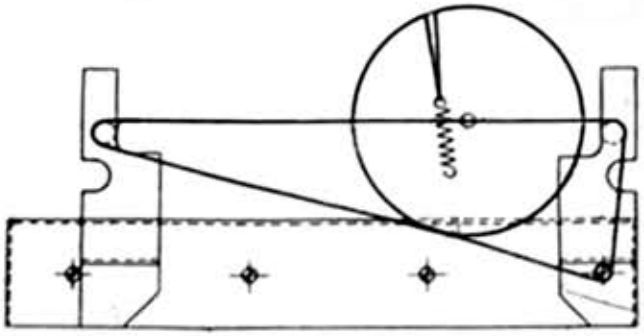

TUBE LOCATION

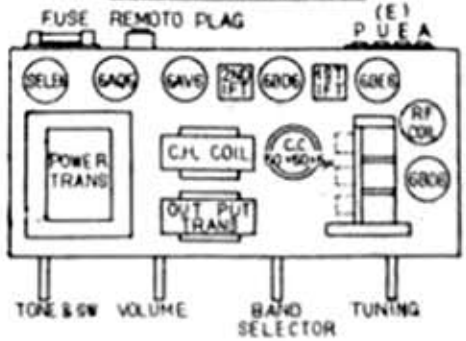

VOLTAGE ····· 100V, 50 ~ 60~
POWER CONSUMPTION 40W

Edit by JA3GZP

NIPPON COLUMBIA CO.,LTD. KAWASAKI, JAPAN.