Columbia WIRING DIAGRAM R-728

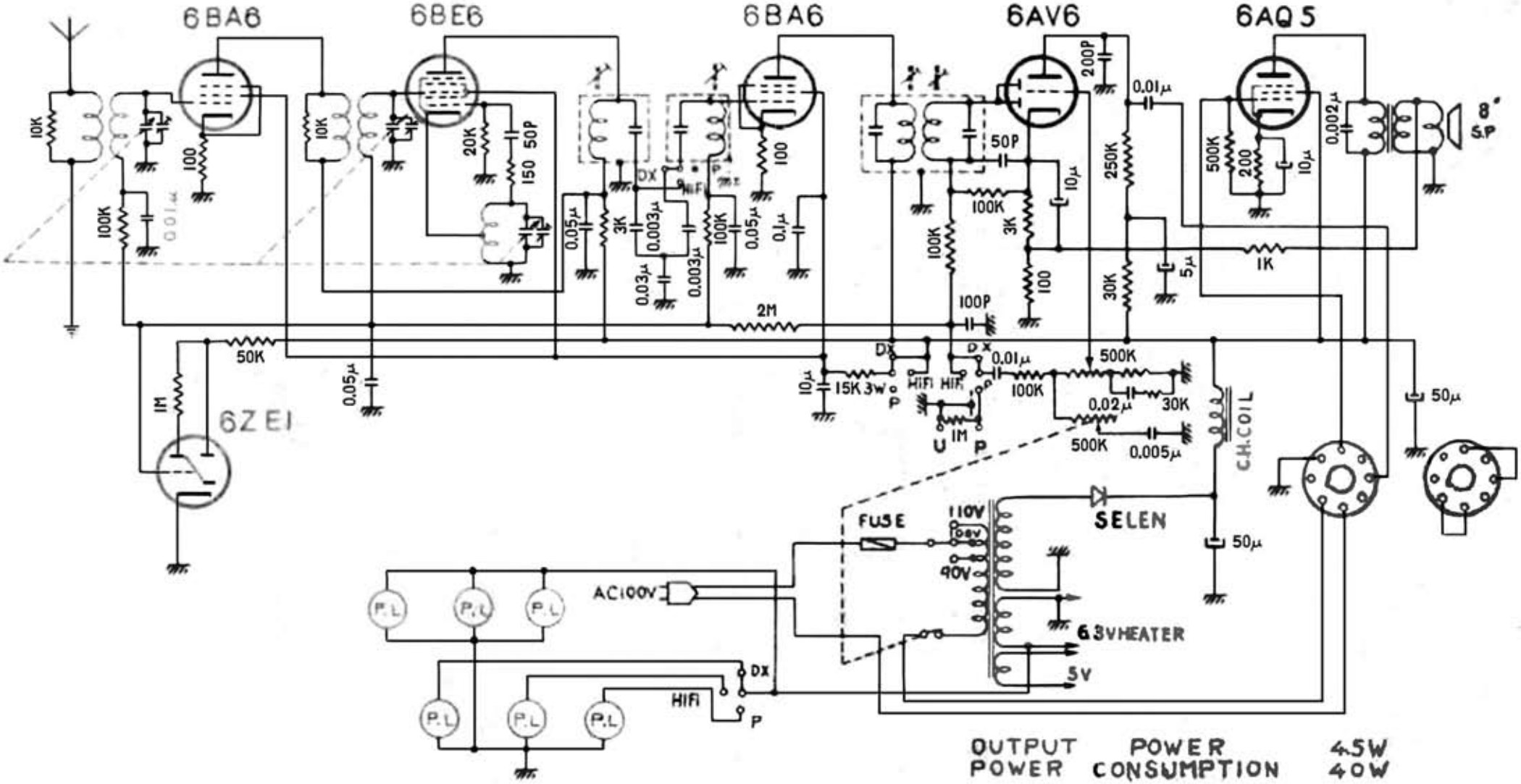

Edit by JA3JZP

NIPPON COLUMBIA CO., LTD. KAWASAKI, JAPAN.