Columbia

WIRING DIAGRAM MODEL STA-61

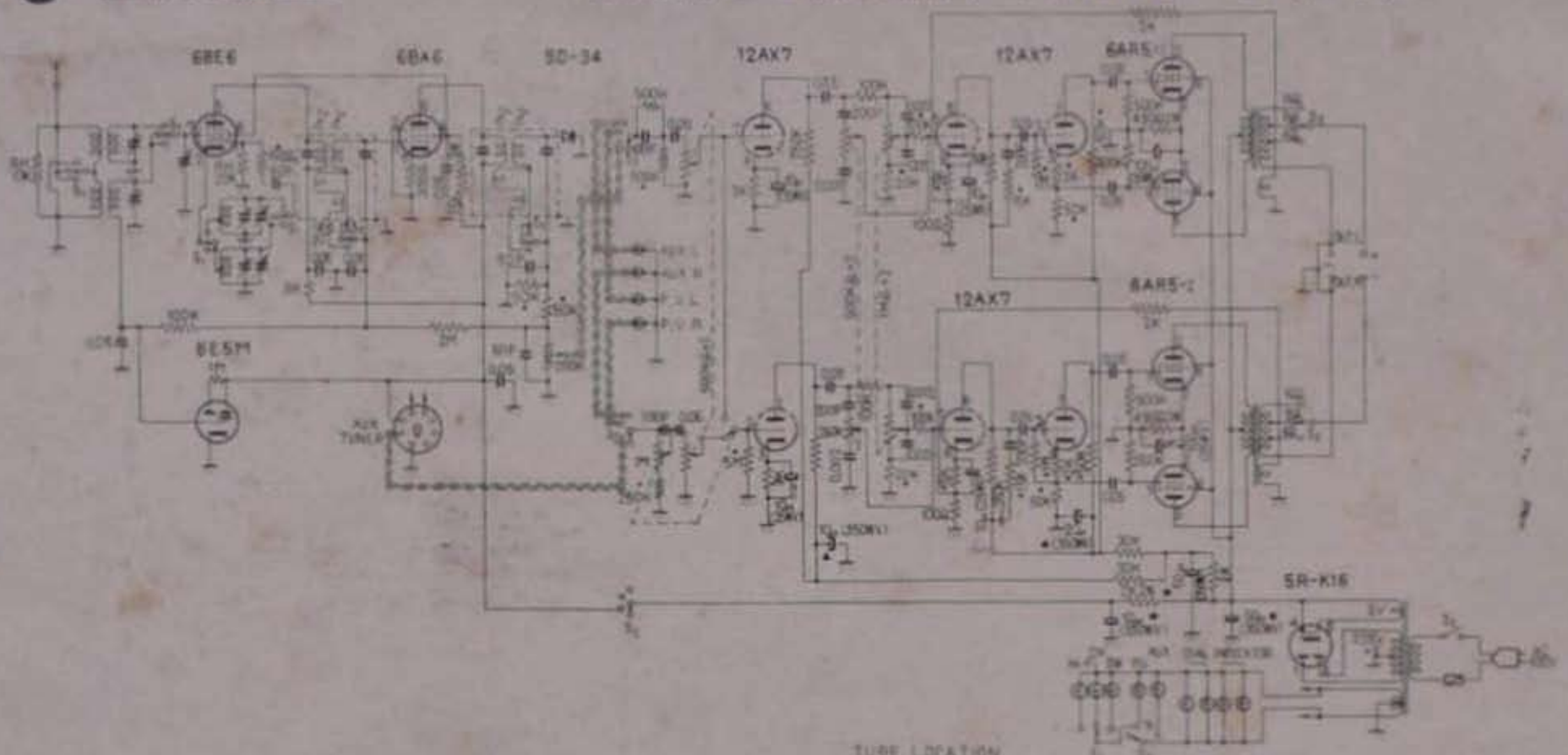

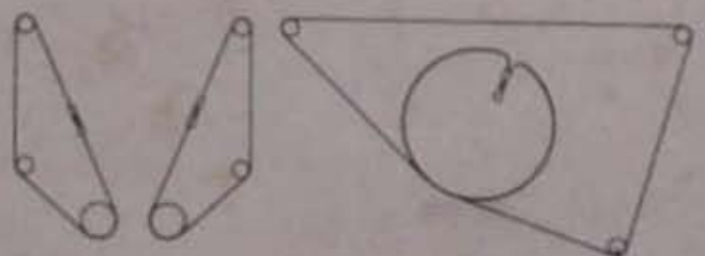

STRINGING DIAGRAM

TUBE LOCATION

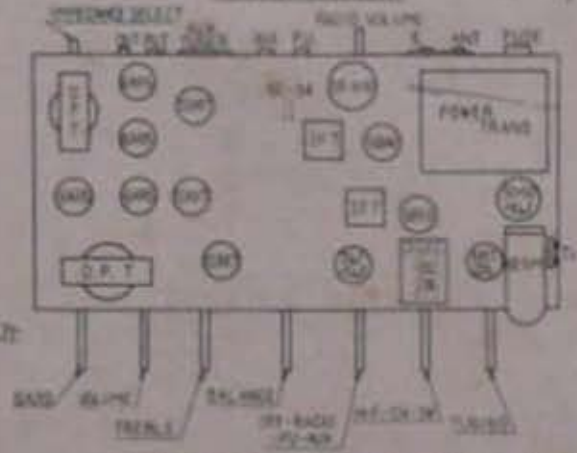

VOLTAGE AC 100V 50~ 60~
POWER CONSUMPTION 15W

NIPPON COLUMBIA CO.,LTD. KAWASAKI JAPAN.