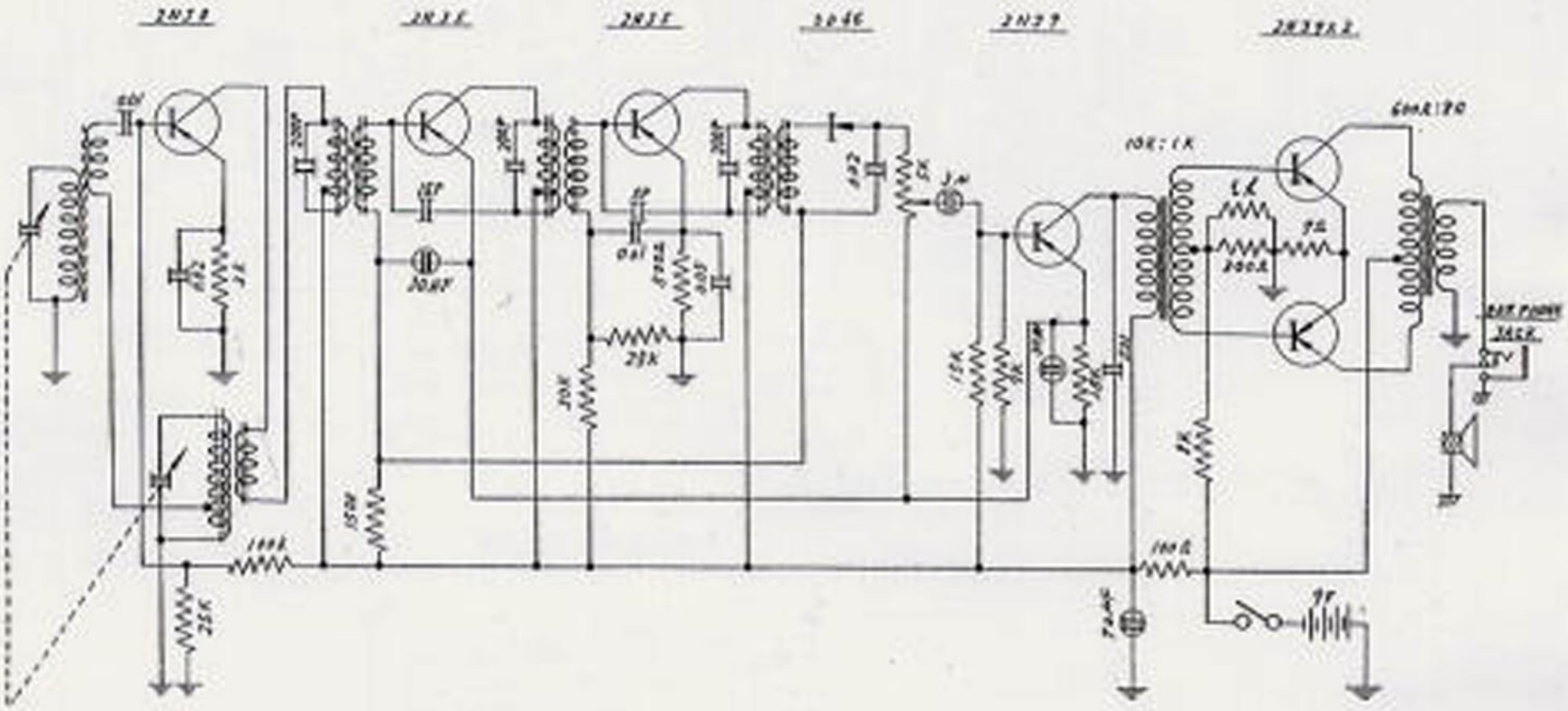MODEL 1810