Columbia WIRING DIAGRAM MODEL 1000

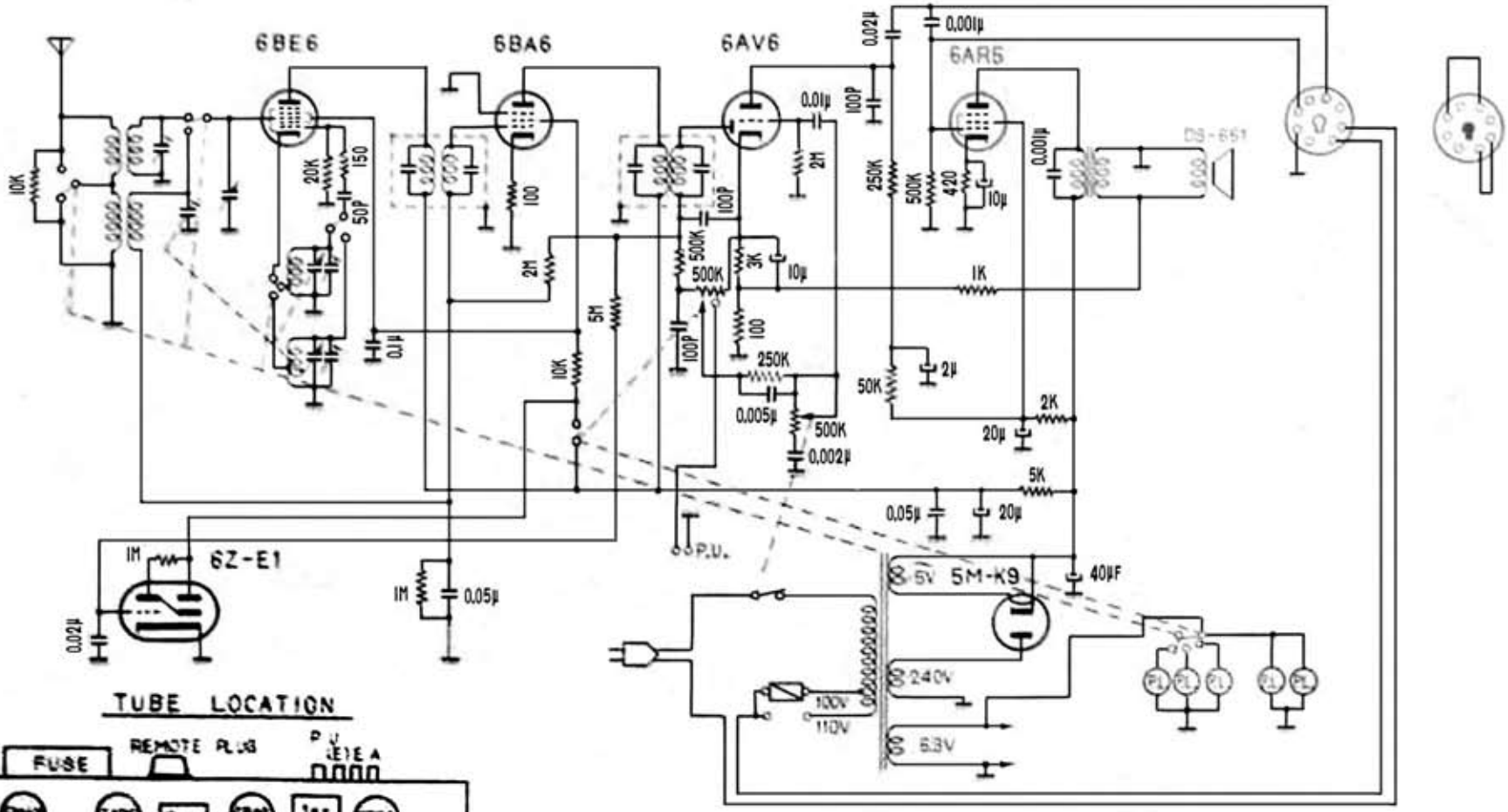

TUBE LOCATION

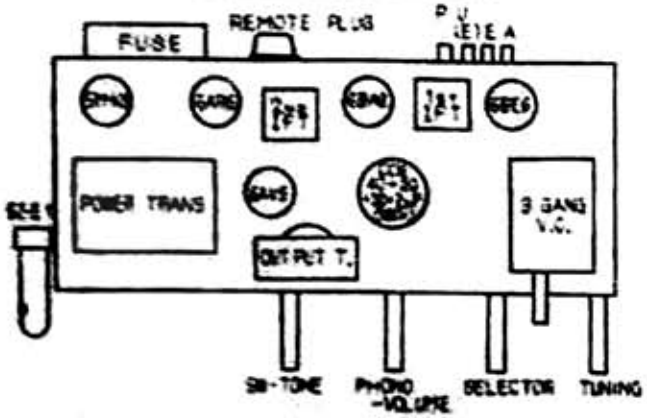

STRINGING DIAGRAM

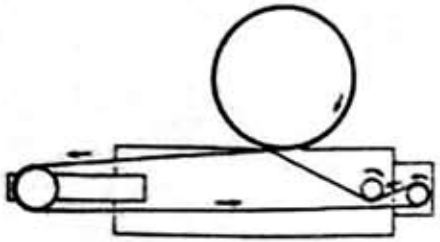

VOLTAGE 100V 50~ 60~
POWER CONSUMPTION 38 W.

Edit by JA3GZP

PR-6848

NIPPON COLUMBIA CO.,LTD KAWASAKI JAPAN.