Columbia WIRING DIAGRAM MODEL 1005

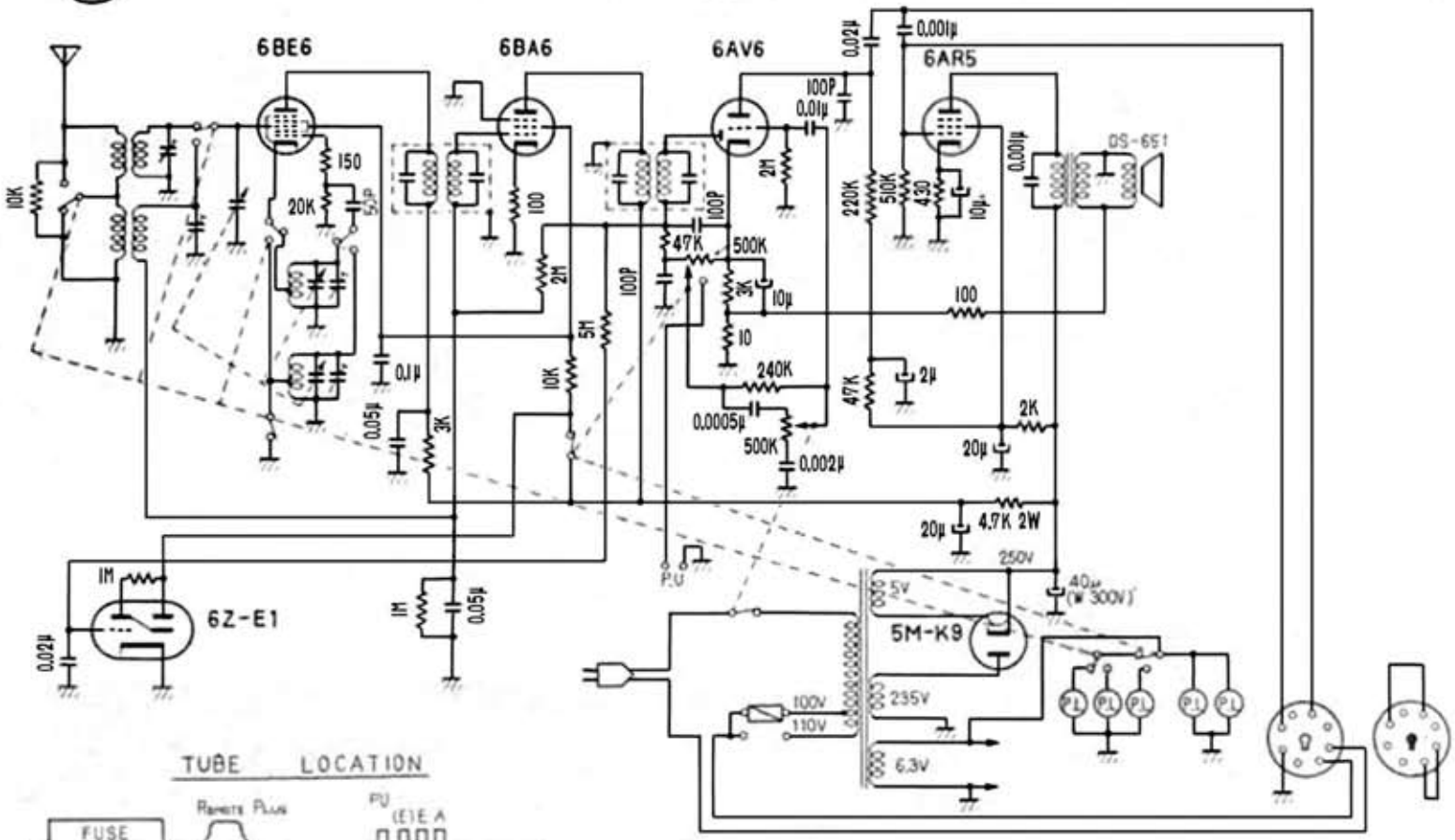

TUBE LOCATION

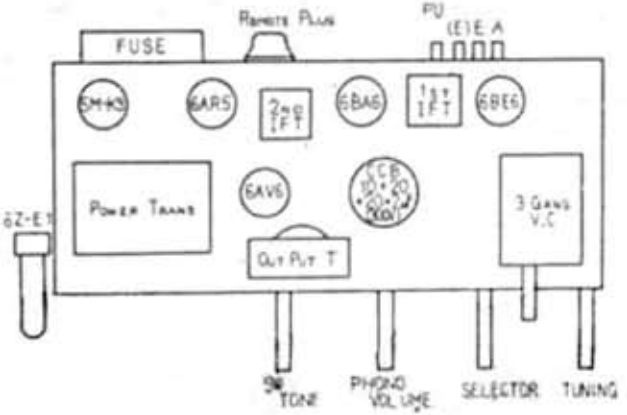

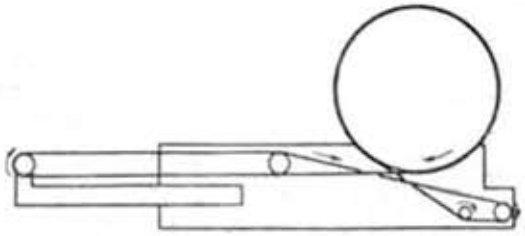

STRINGING DIAGRAM

ワット数無記入抵抗は1/2Wトス

VOLTAGE 100V 50~ 60~
POWER CONSUMPTION 38W

Edit by JA3GZP

PR-809

NIPPON COLUMBIA CO.,LTD. KAWASAKI JAPAN.