MODEL 1206

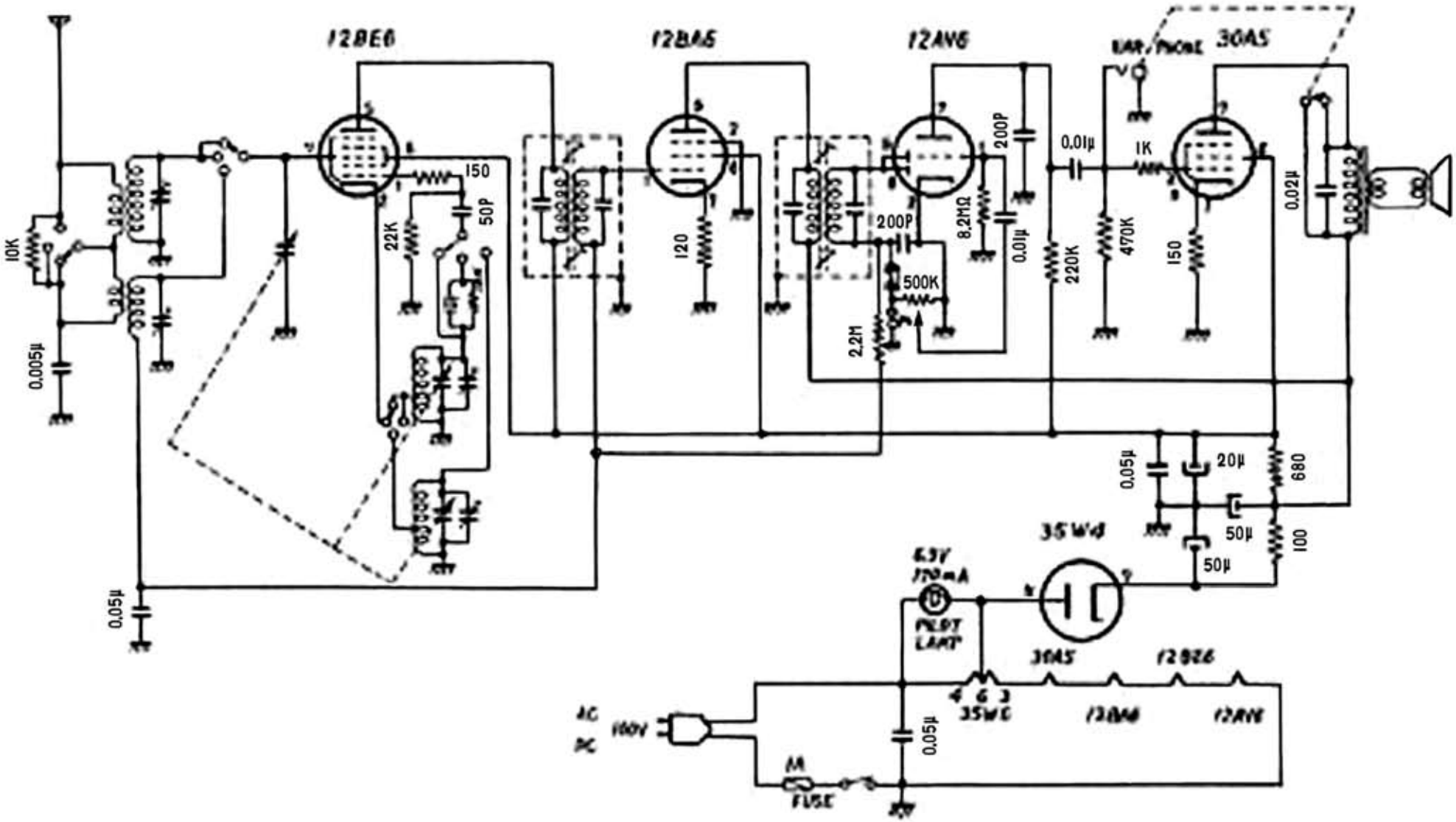

Edit by JA3GZP