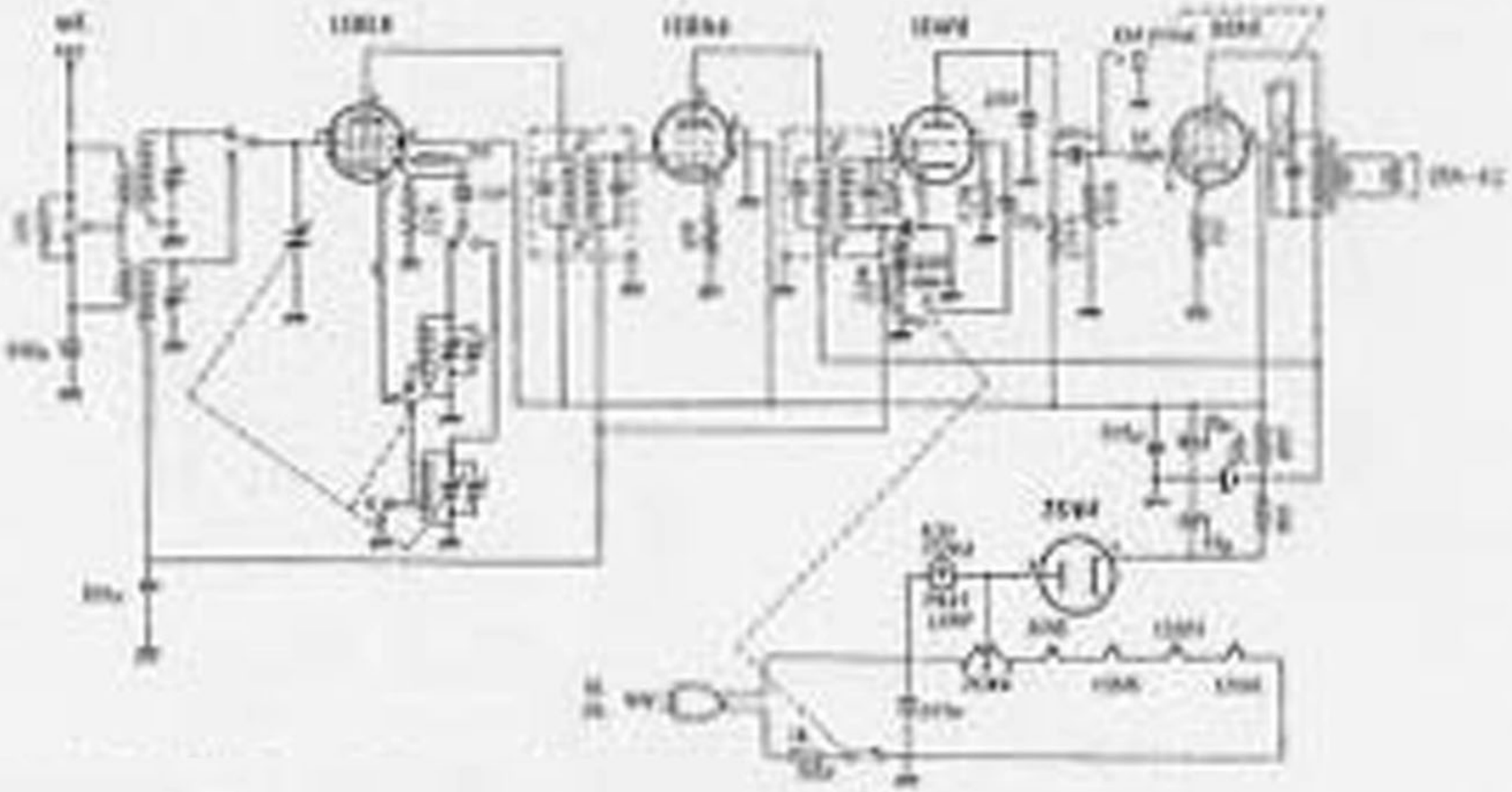# MODEL 1280