Columbia WIRING DIAGRAM MODEL 1520

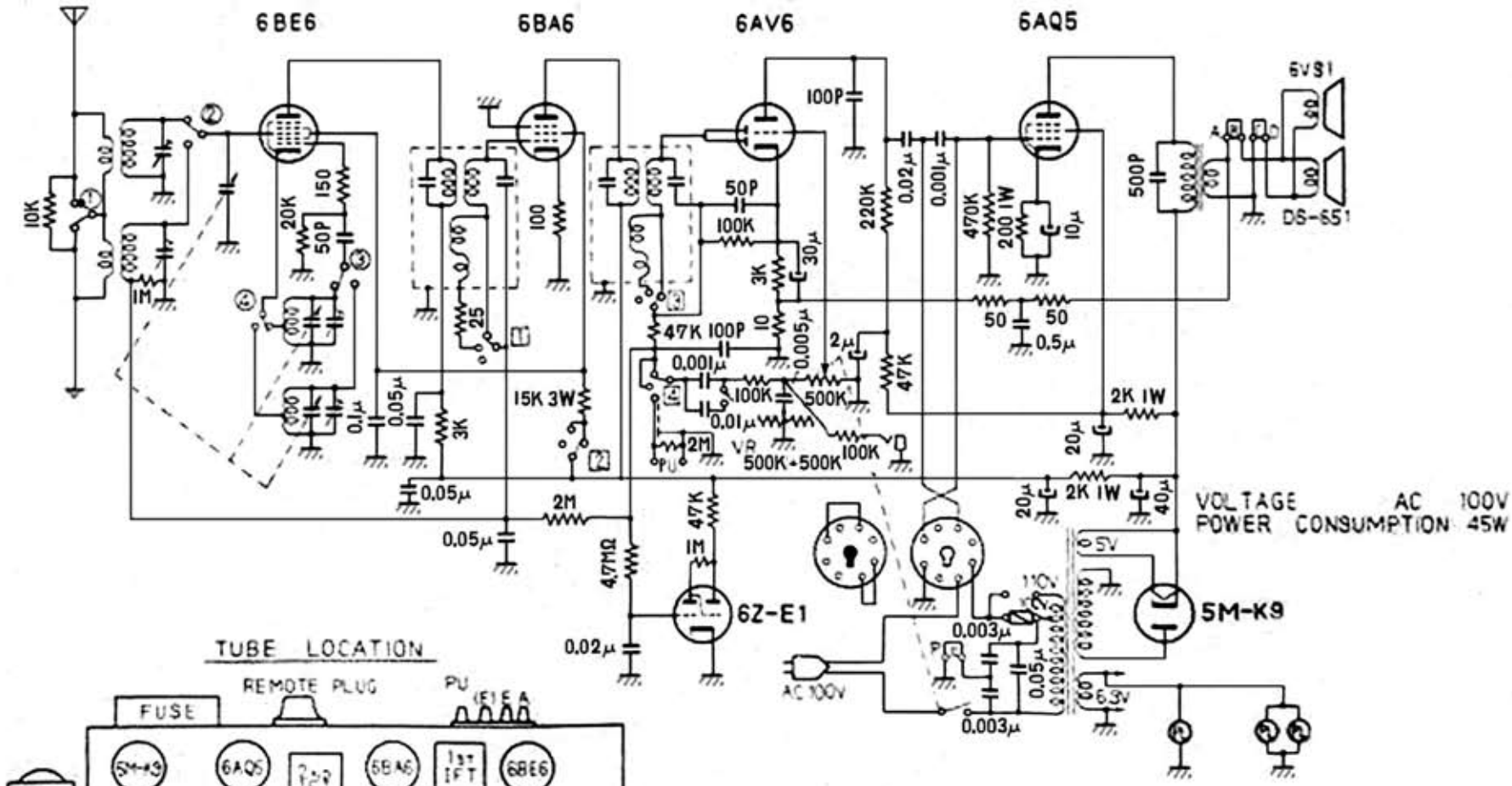

TUBE LOCATION

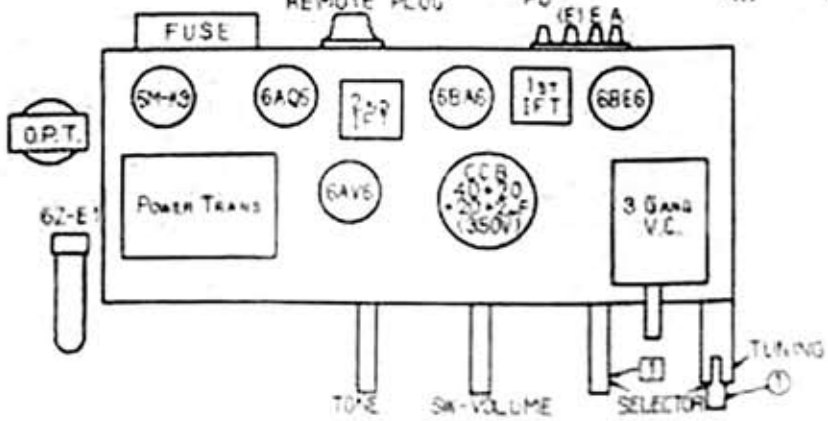

STRINGING DIAGRAM

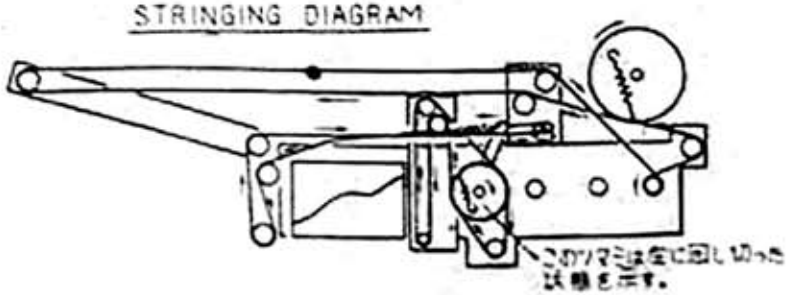

NIPPON COLUMBIA CO., LTD. KAWASAKI JAPA

Edit by JA3GZP