Columbia WIRING DIAGRAM MODEL 1725

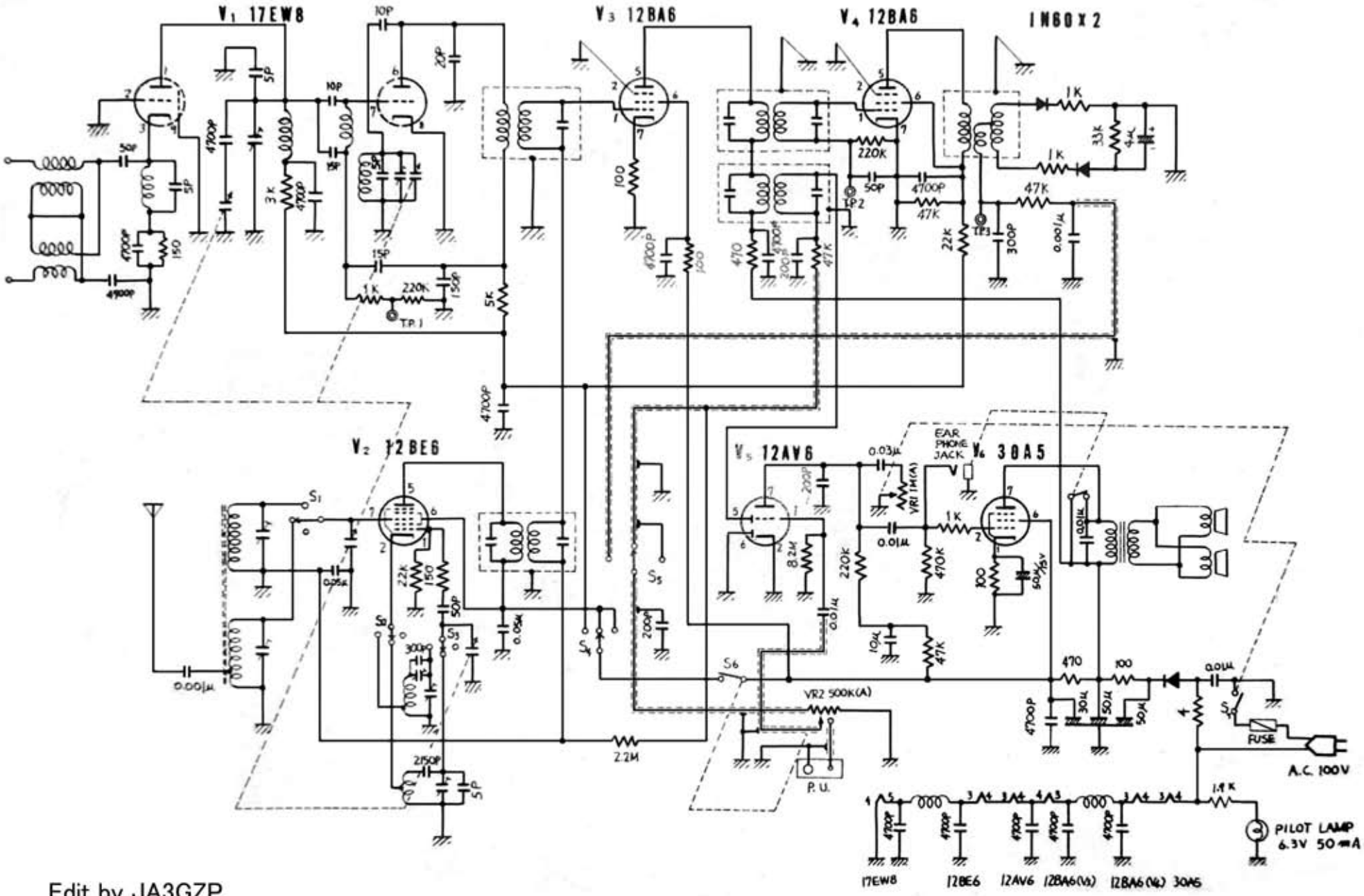

Edit by JA3GZP