Concertone

MODEL A-501

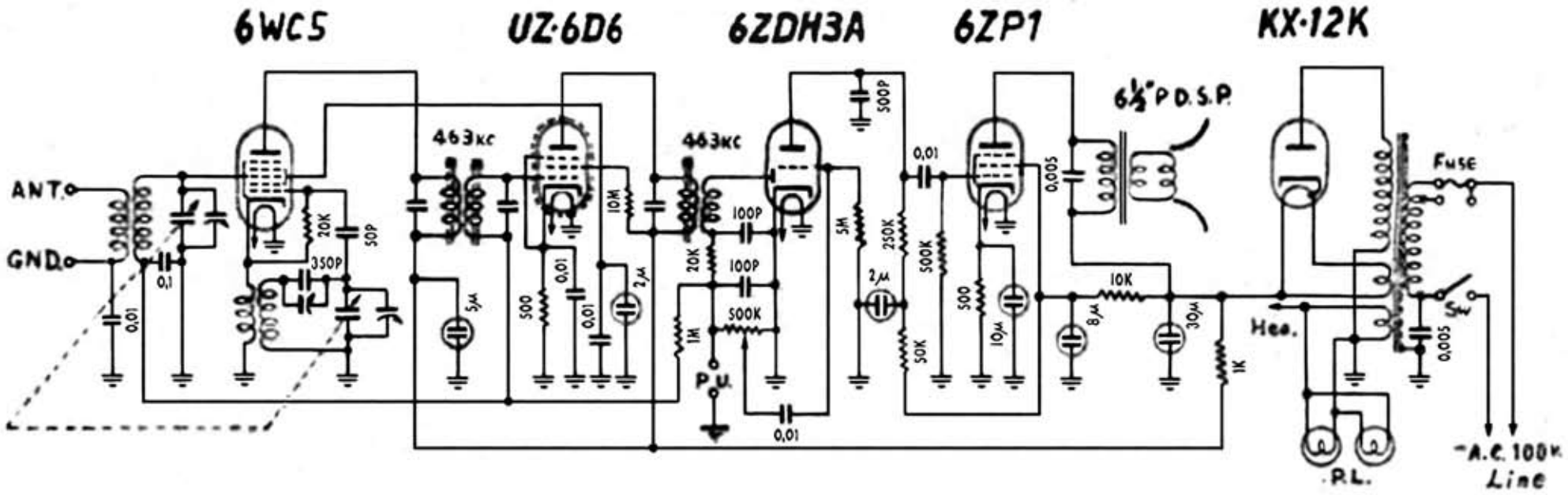

Edit by JA3GZP