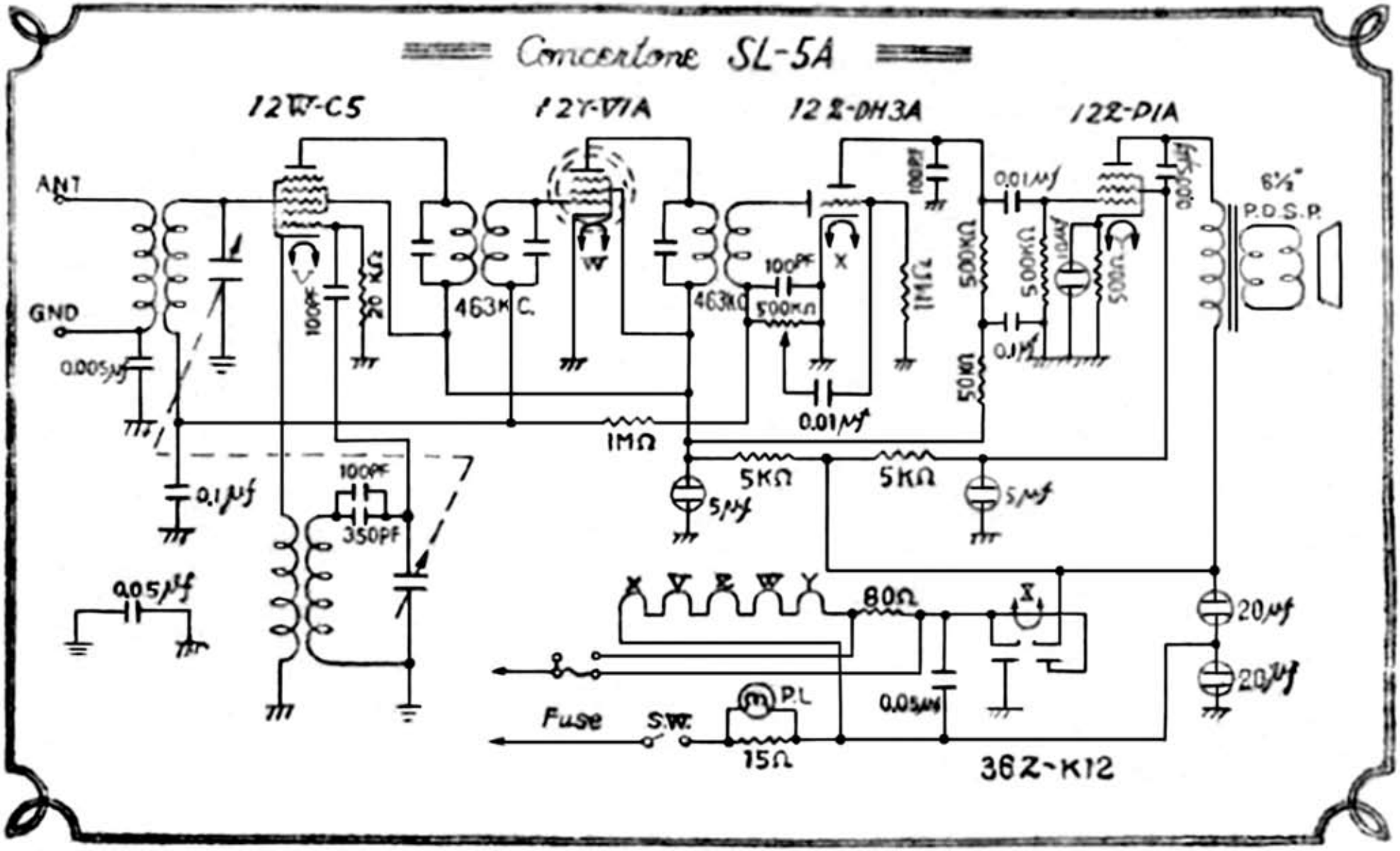

Edit by JA3GZP