CROWN SPH-140

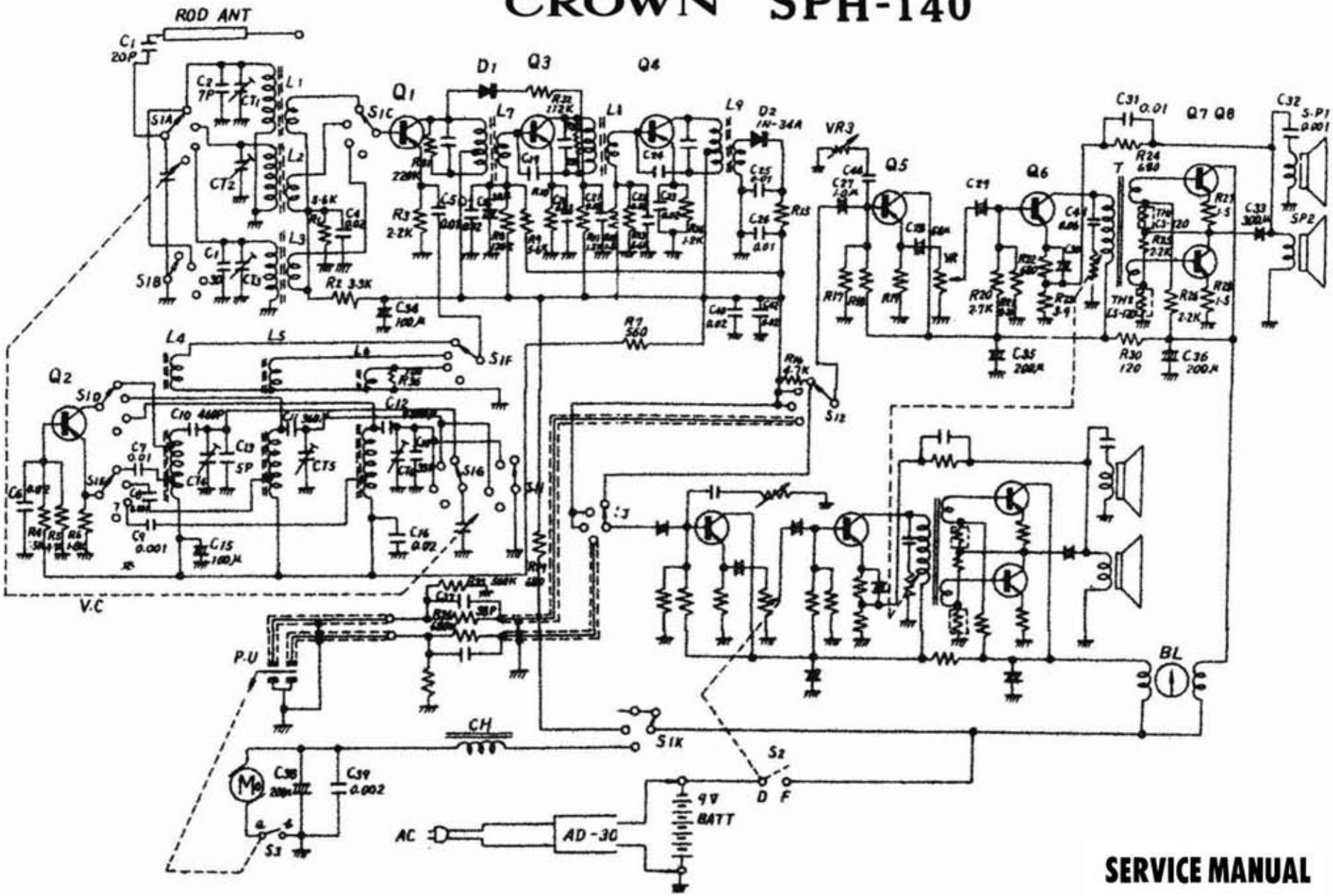

SERVICE MANUAL