CROWN MODEL STP-35R

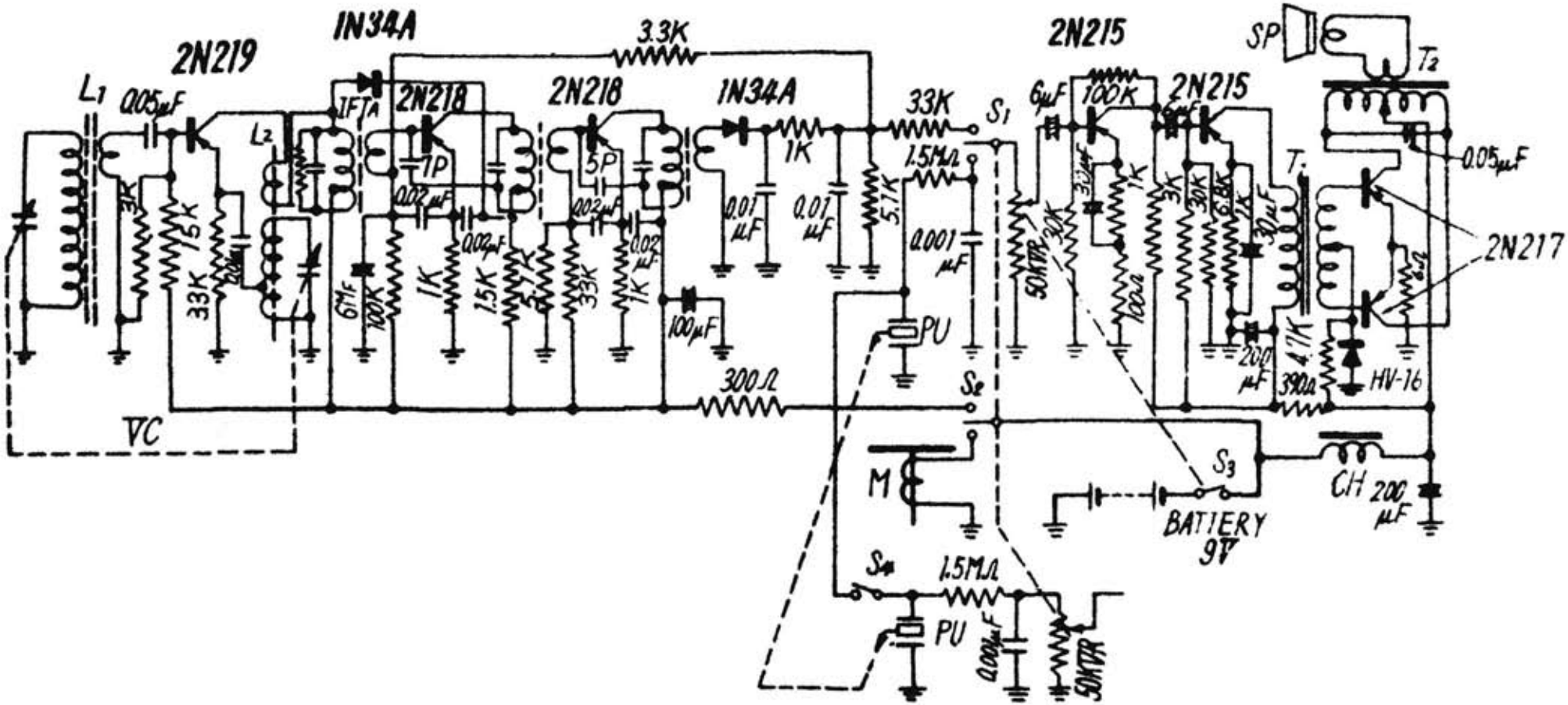

Circuit diagram of right channel
(Left channel is the same as above except 200μF. M. CH, Battery)