CROWN TR-24, TS-34

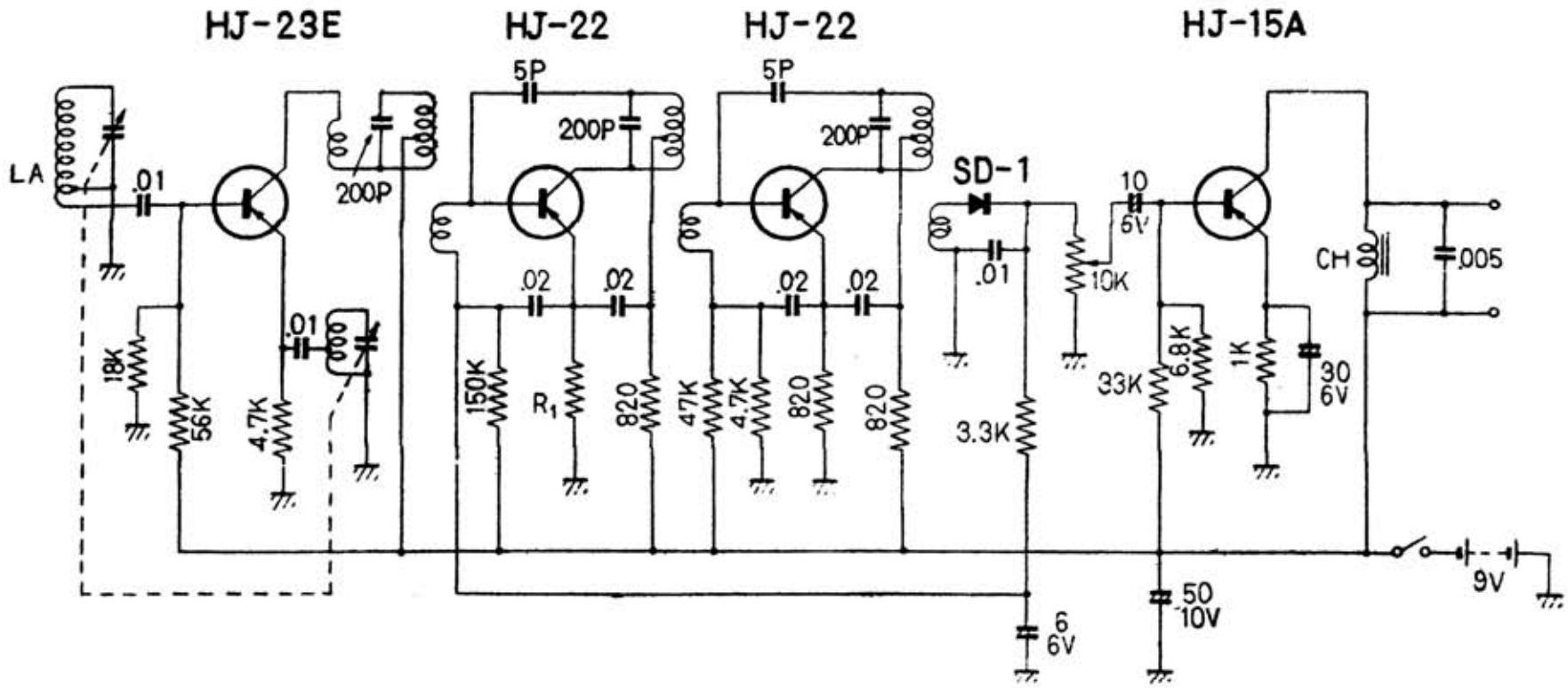

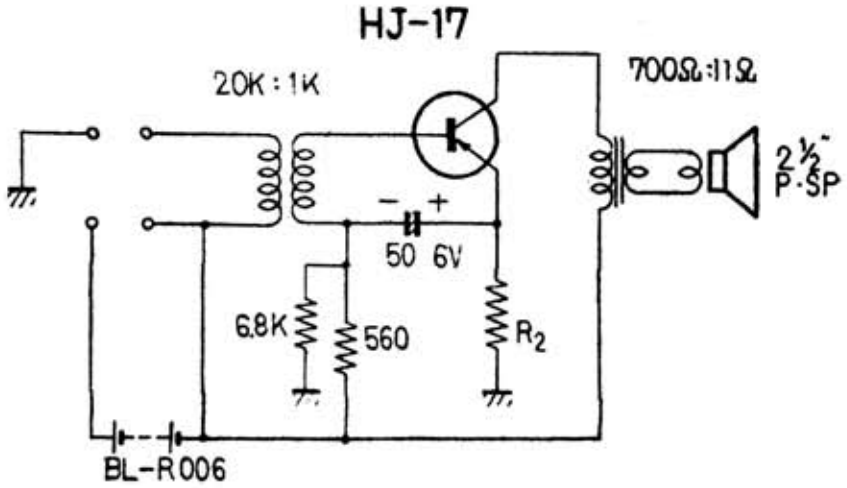

SERVICE MANUAL