CROWN TRP-6R

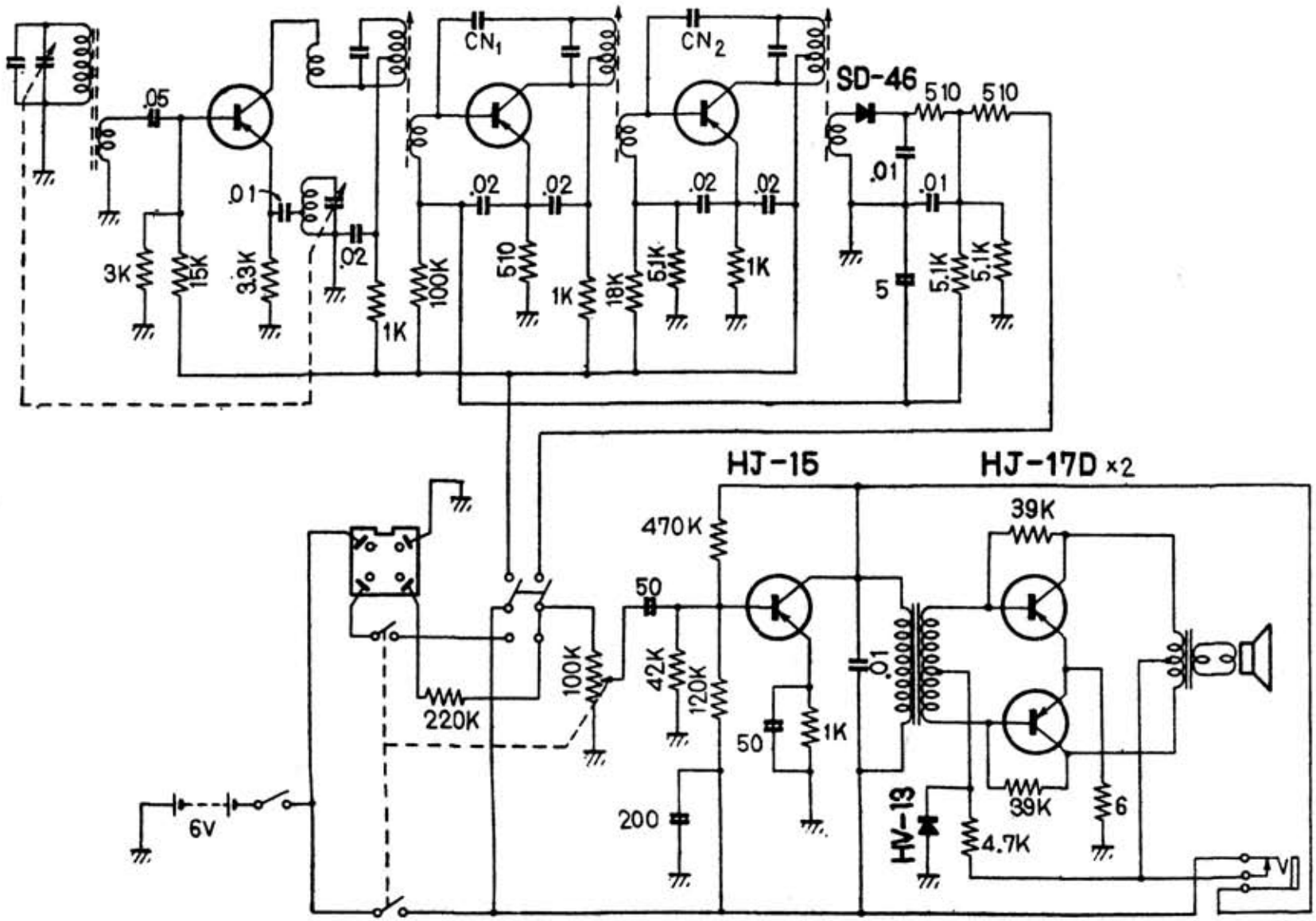

SERVICE MANUAL