EMPIRE MODEL MS-1010

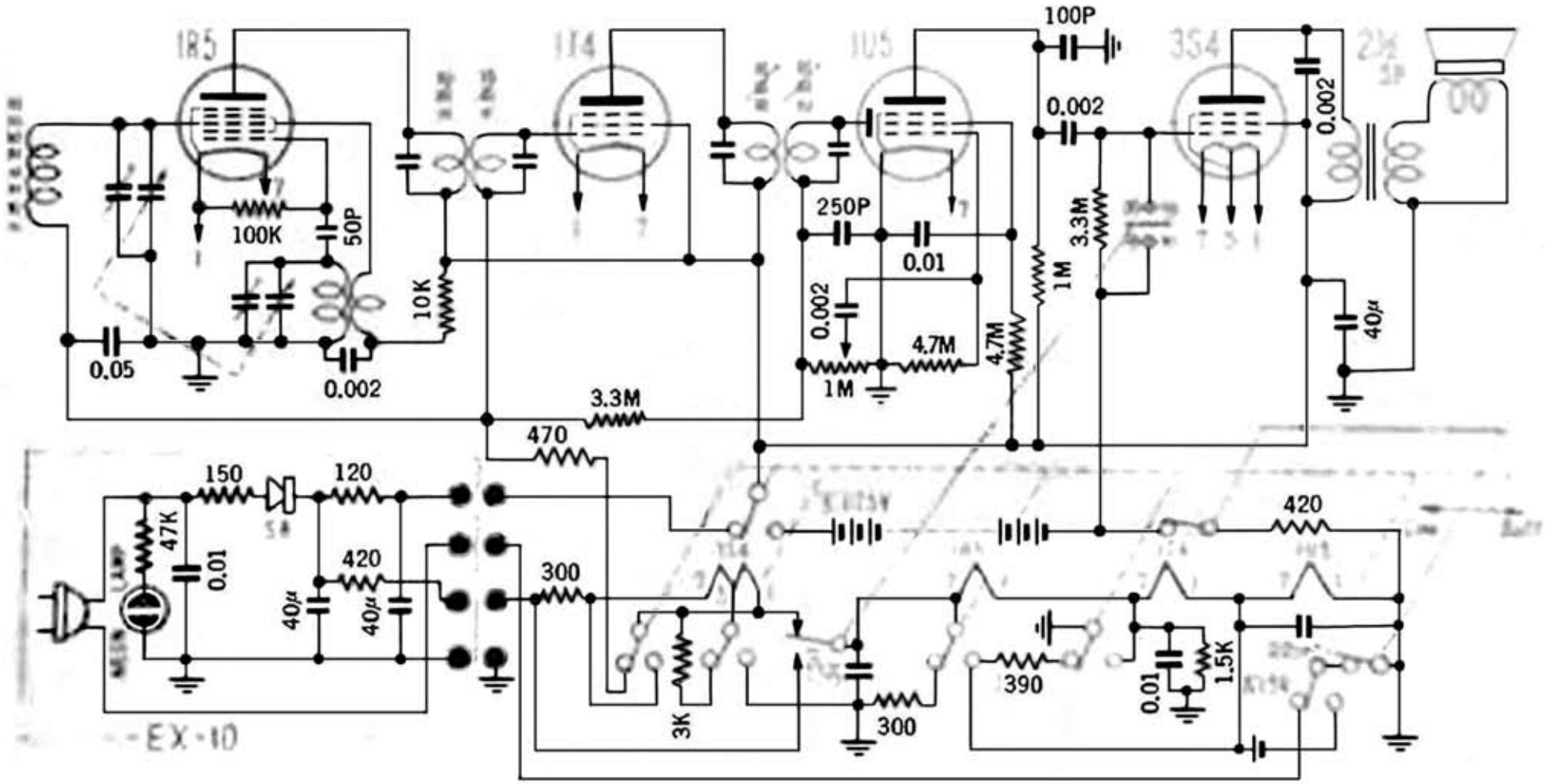

Edit by JA3GZP