N-66 接続図

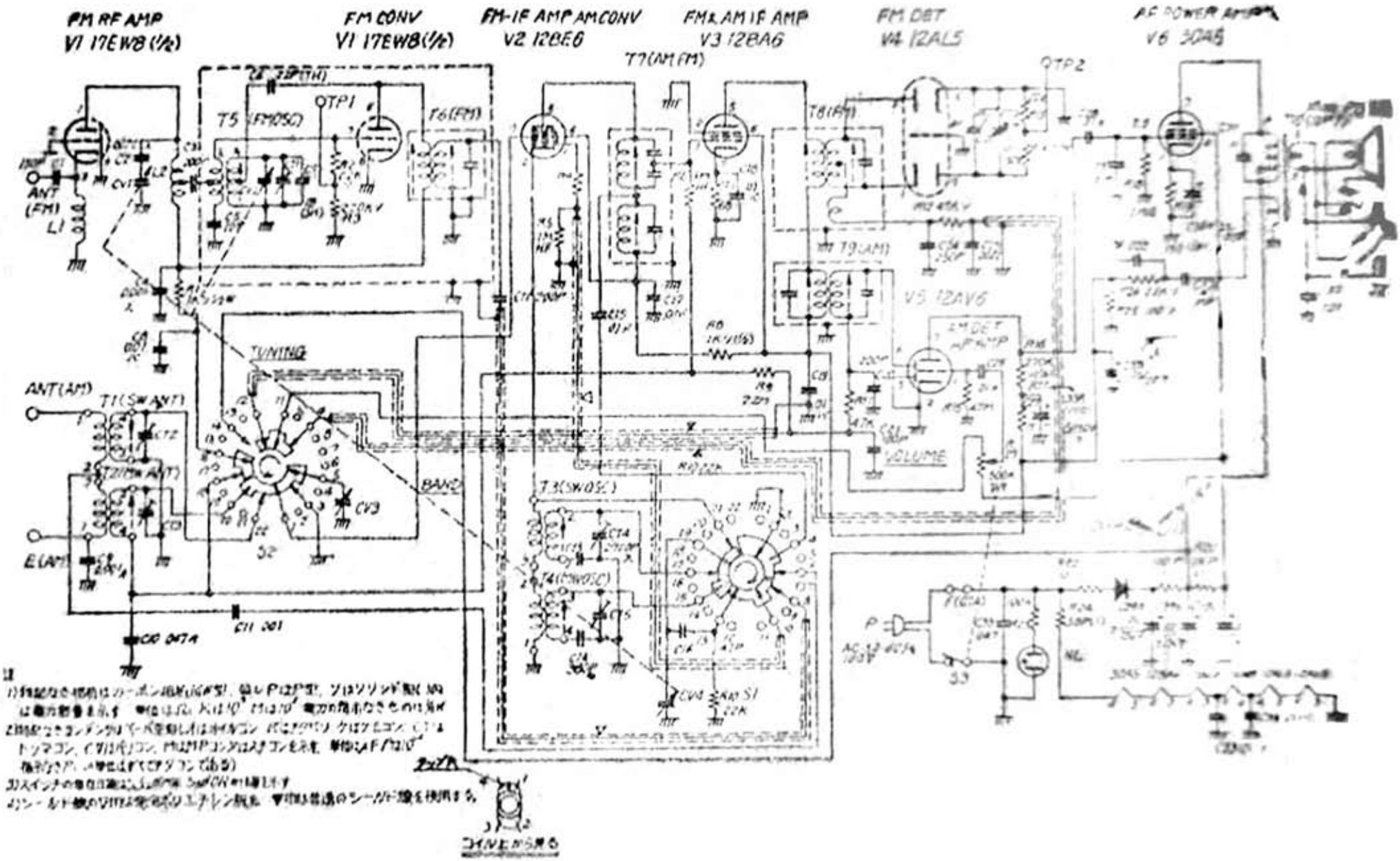
FM RF AMP
V1 17EW8 (1/2)
FM CONV
V1 17EW8 (1/2)
FM-IF AMP AMCONV
V2 12BE6
FM&AM IF AMP
V3 12BA6
FM DET
V4 12AL5
AF POWER AMP
V6 3DA5
T7(AM FM)
TP1
TP2
T5 (FM OSC)
T6(FM)
T8(FM)
T9(AM)
V5 12AV6
FM DET AF AMP
VOLUME
TUNING
BAND
ANT (FM)
L1
ANT(AM)
T1(SW ANT)
T2(BCN ANT)
E(AM)
S2
CV3
T3(SW OSC)
T4(BCN OSC)
CV4
S1
S3
P
AC 12 60Hz
DRIVE から来る