Hitachi. Ltd. S-523

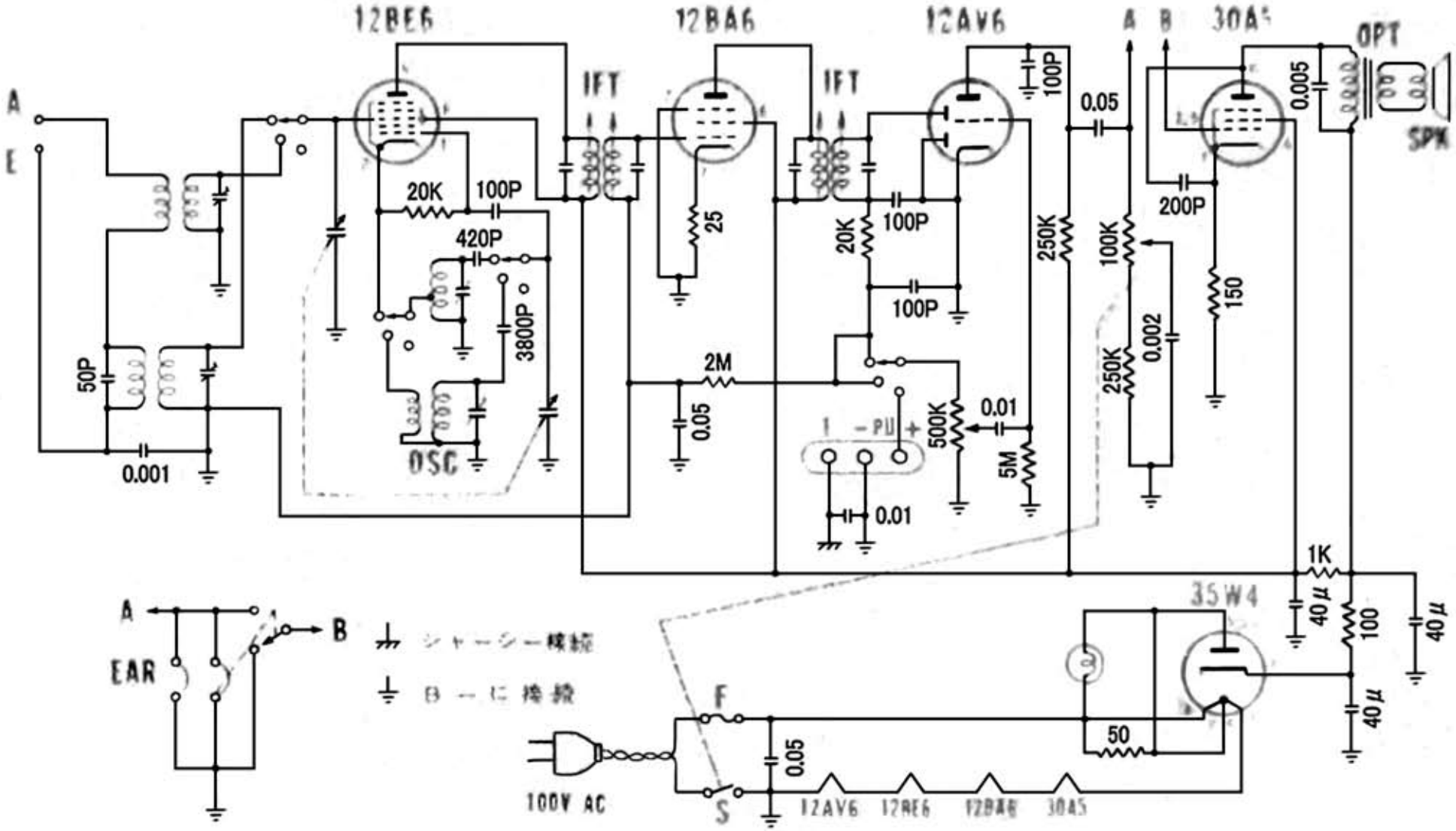

Edit by JA3GZP