NR.6S-21 6 TUBE SUPER-HET. CIRCUIT.

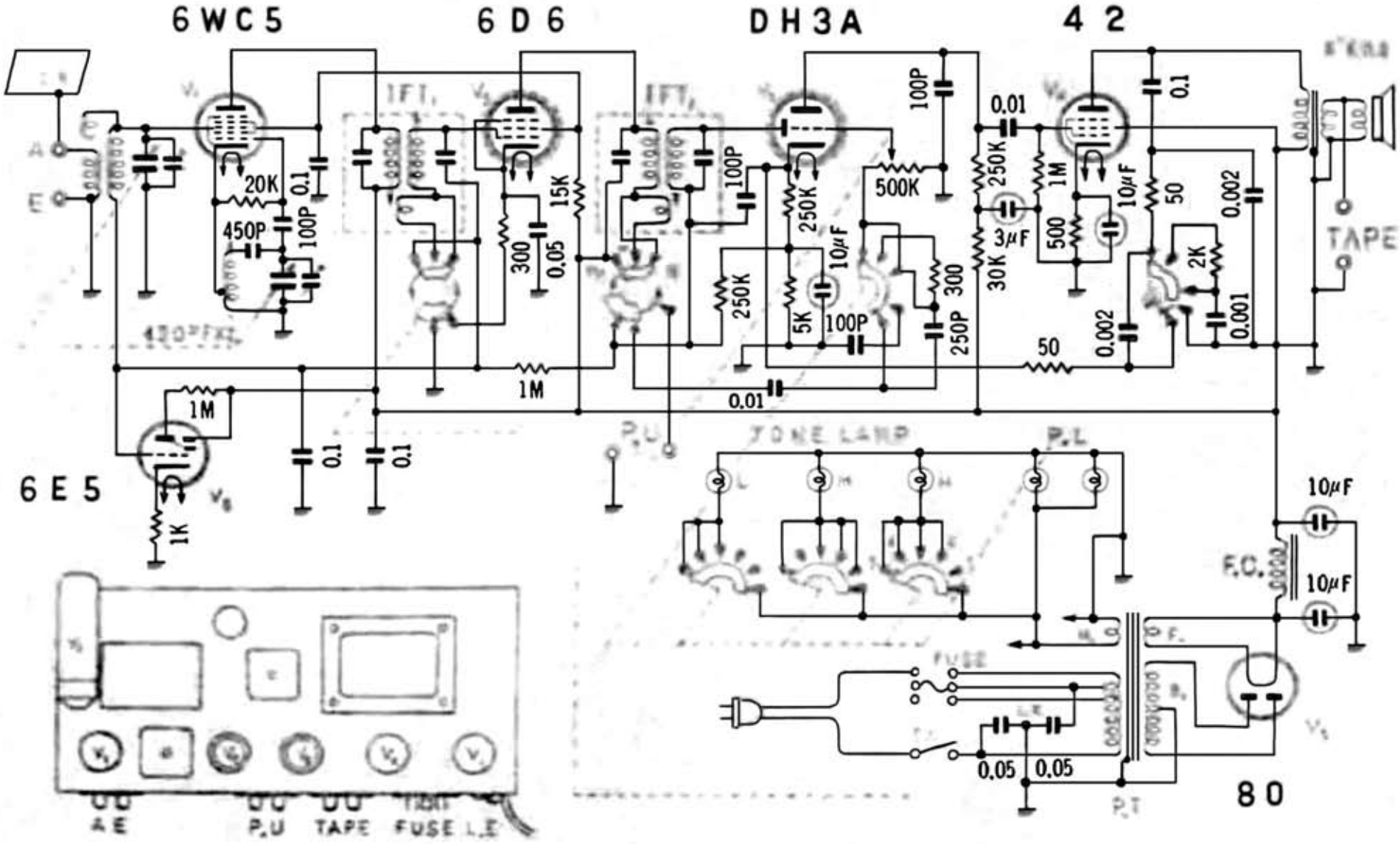

七歐通信機株式會社

Edit by JA3GZP