NATIONAL MODEL GU-362

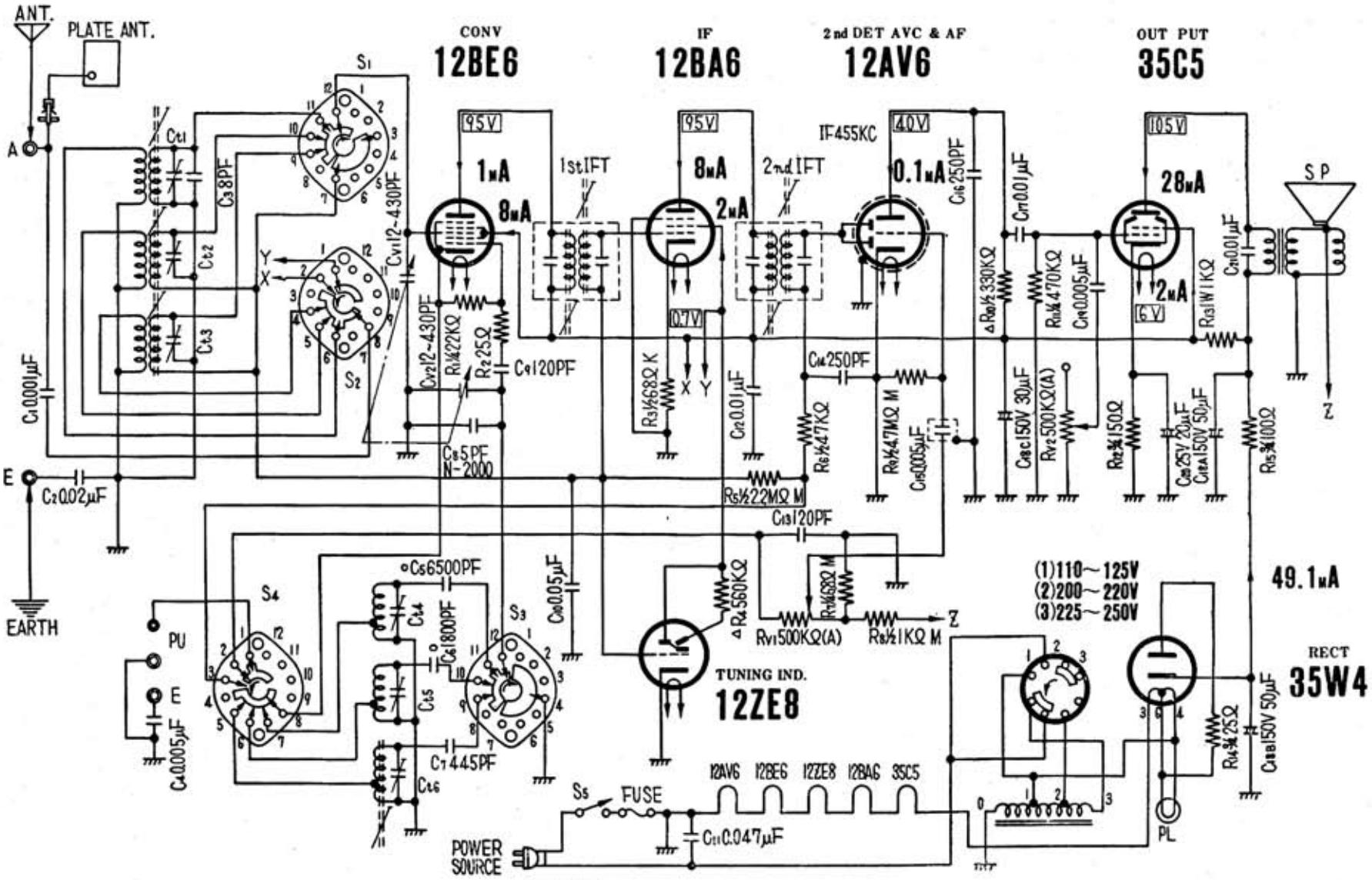

NOTES:

○.....Styrol capacitor

△.....Solid resistor

$C_1 \sim C_6$ Trimmer 6~20PF

Band selector ($S_1 \sim S_4$) shown in phono position and turn to the direction of arrow mark MW band, SW_1 band and SW_2 band.

• C_{15} 0.005μF⟶0.01μF