QA-300

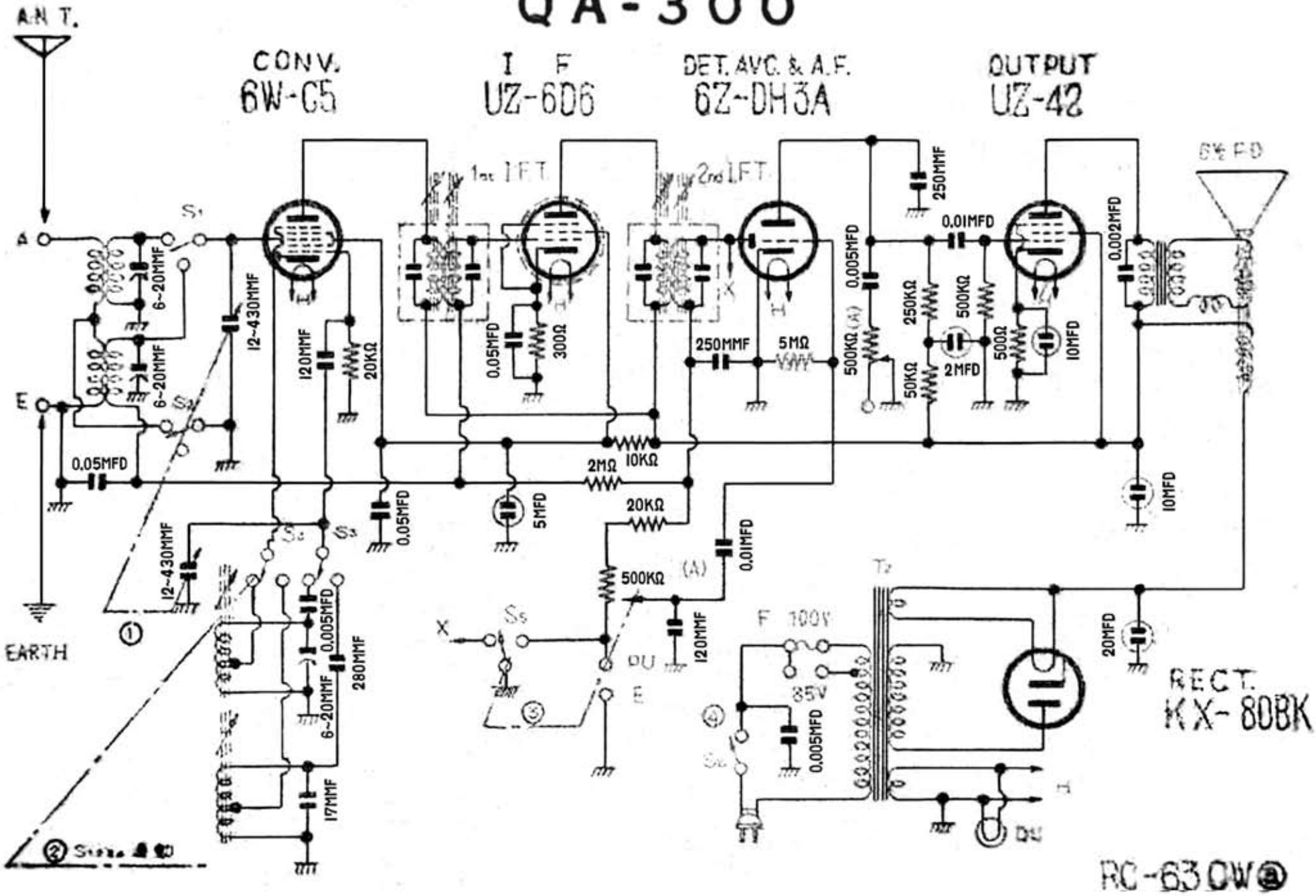

Edit by JA3GZP