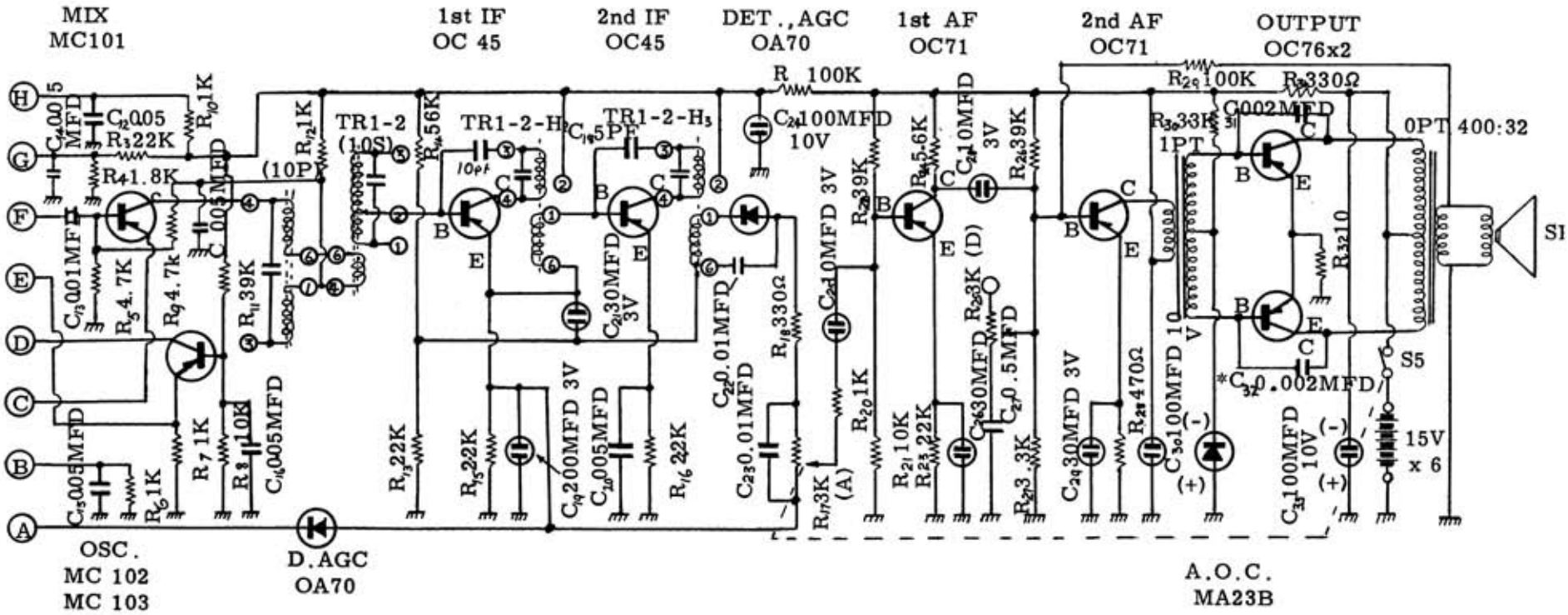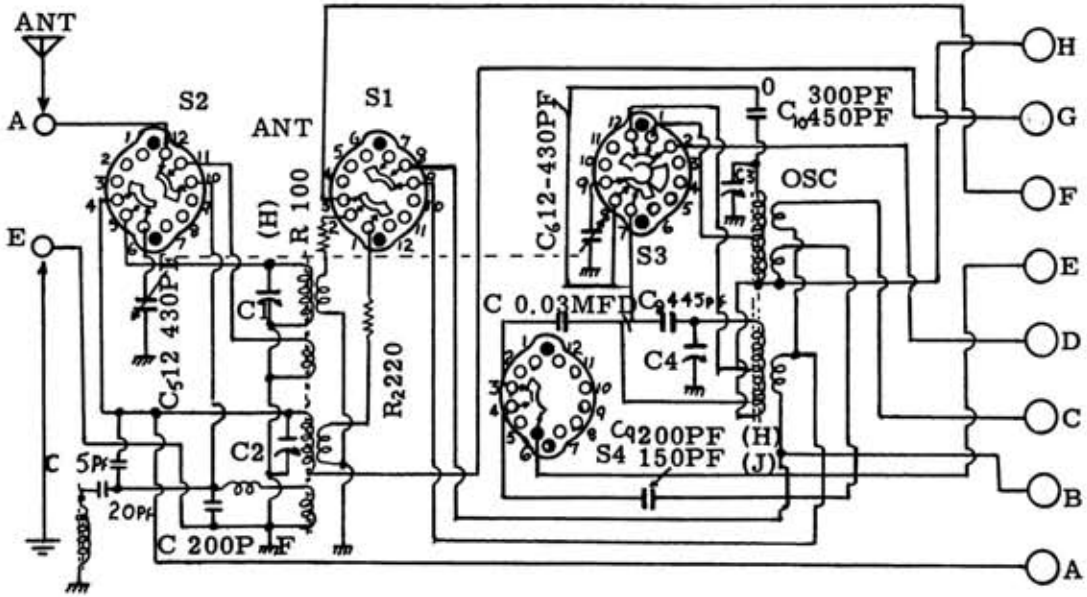NATIONAL DB 421 H or J