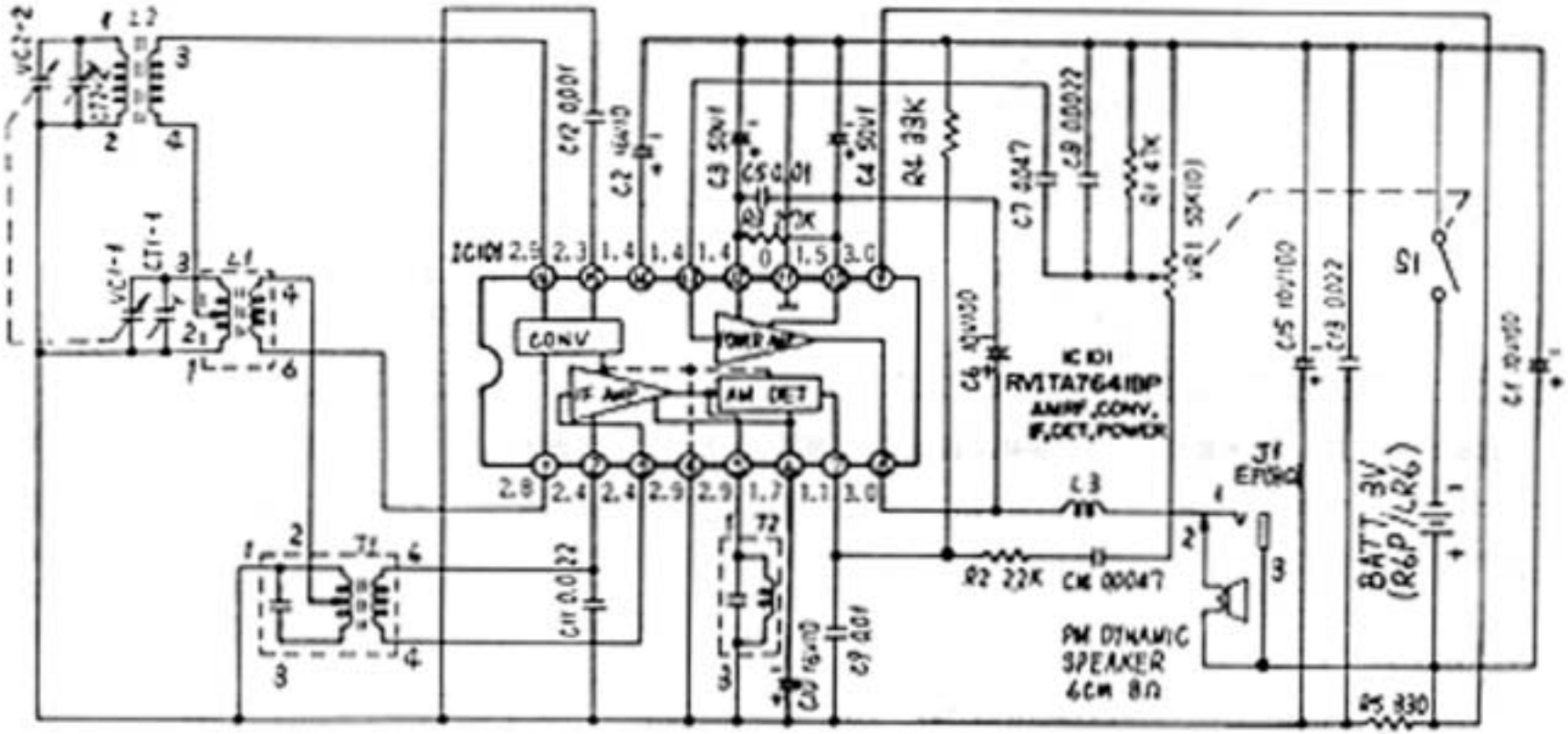
CONV
AM DET
IC101
RV1TA7641BP
AM RF, CONV,
IF, DET, POWER
R4 33K
R2 22K
CN 0.0047
FM DYNAMIC
SPEAKER
4CM 8Ω
BATT 3V
(R6P/LR6)
S1
J1
EPHONE
R5 330

R-1006