Sym	Date	Revision	Changed From	Signed	Checked	Approved

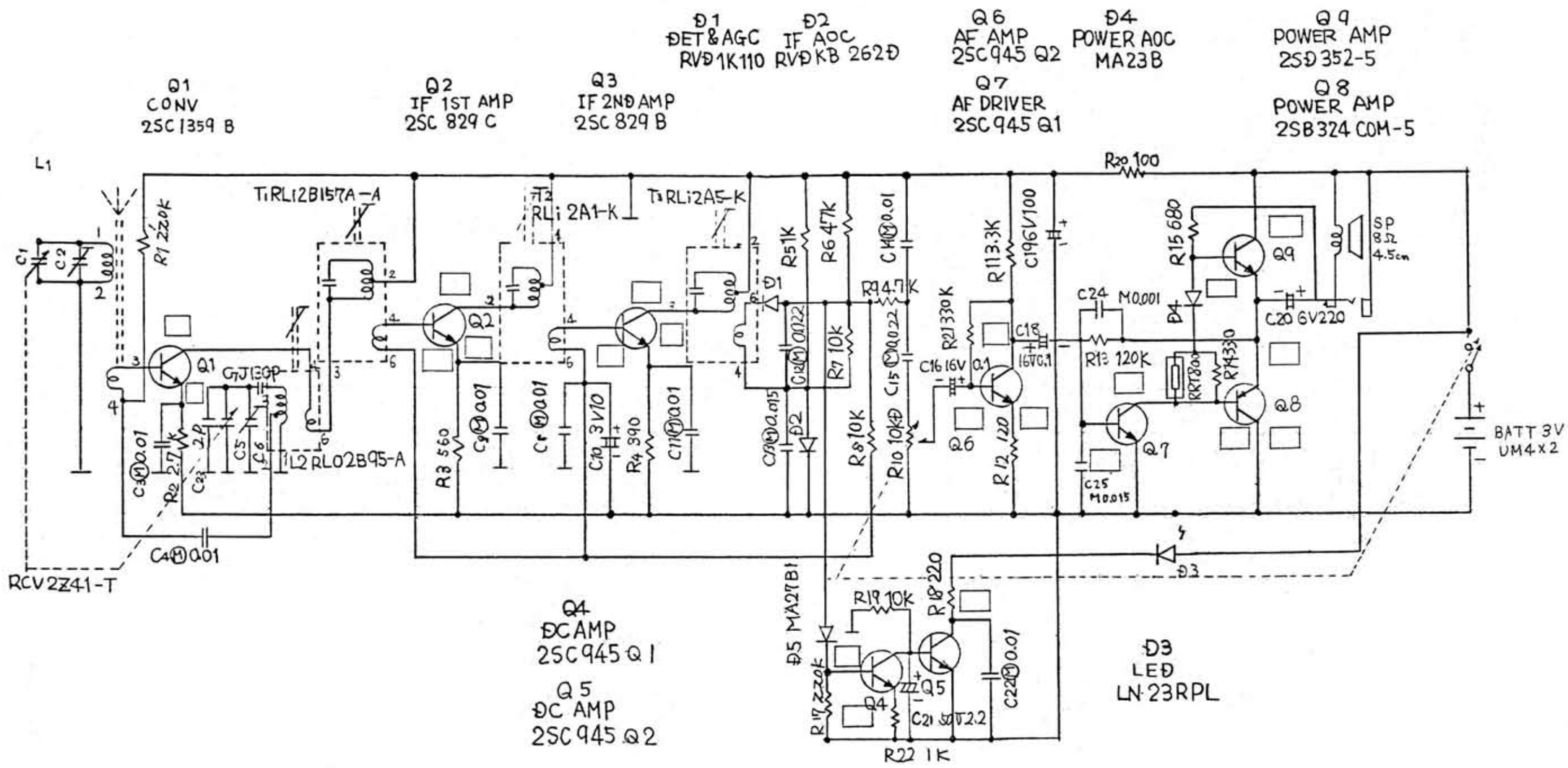

| | | | | | |