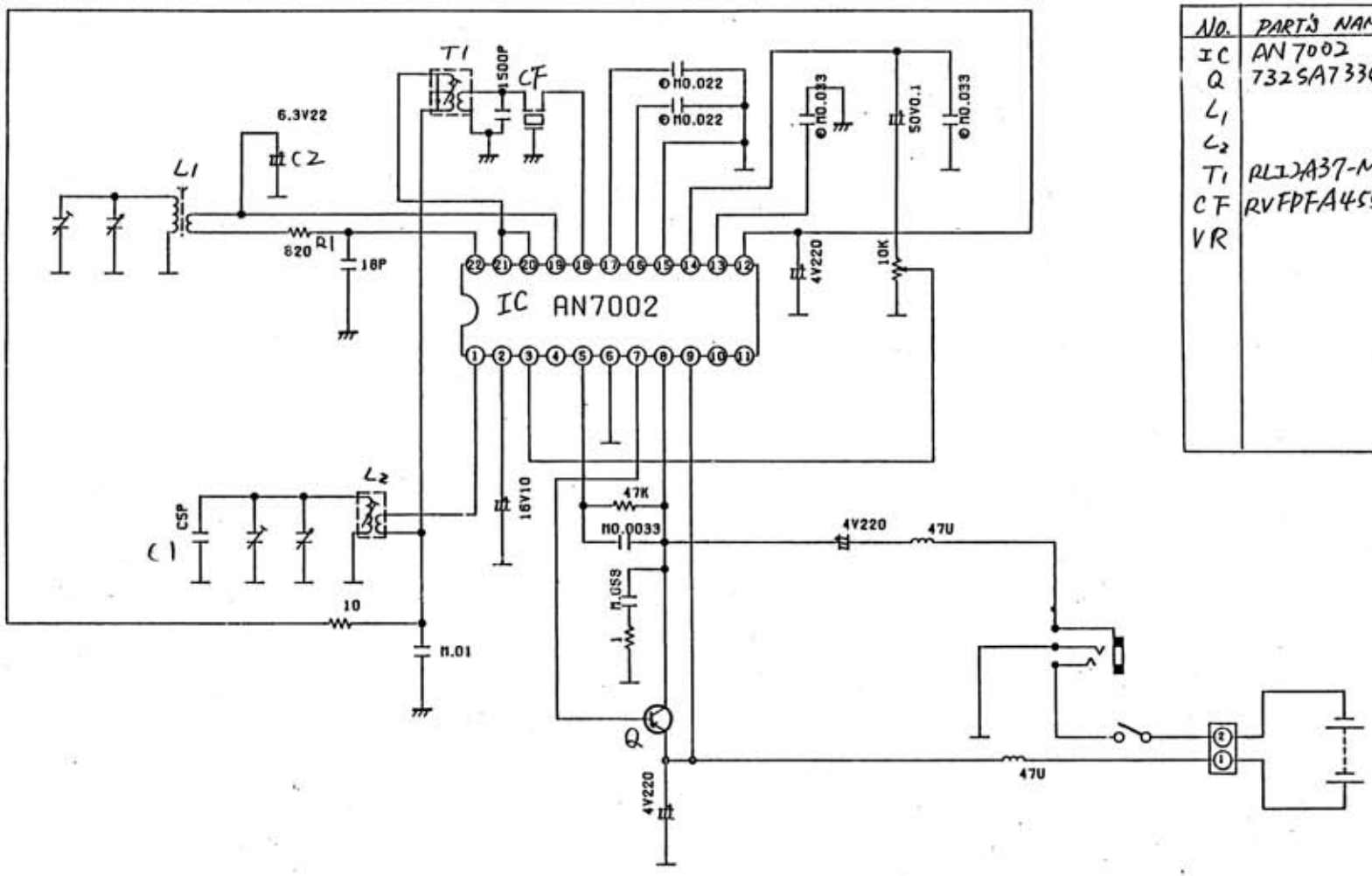


| No. | PART'S NAME |
|---|---|
| IC | AN7002 |
| Q | 732SA733Q |
| L1 | |
| L2 | |
| T1 | RL1JA37-M |
| CF | RVFPFA455A |
| VR | |

| Designed | Checked | Approved | Model |
|---|---|---|---|
| | | | R-3-J |

TAIWAN MATSUSHITA ELECTRIC CO.,LTD. AUDIO DIVISION