Sym	Date	Revision	A	B	C	D	E	F	Changed From	Signed	Checked	Approved
A	1/8/85	PARTS CHANGED							1st	S.T		
A	28/8/85	PARTS CHANGED							1st	S.T		
A	9/9/85	PARTS CHANGED							1st	S.T		
A	27/9/85	PARTS CHANGED							1st	S.T		
A	28/10/85	PARTS CHANGED							1st	S.T		

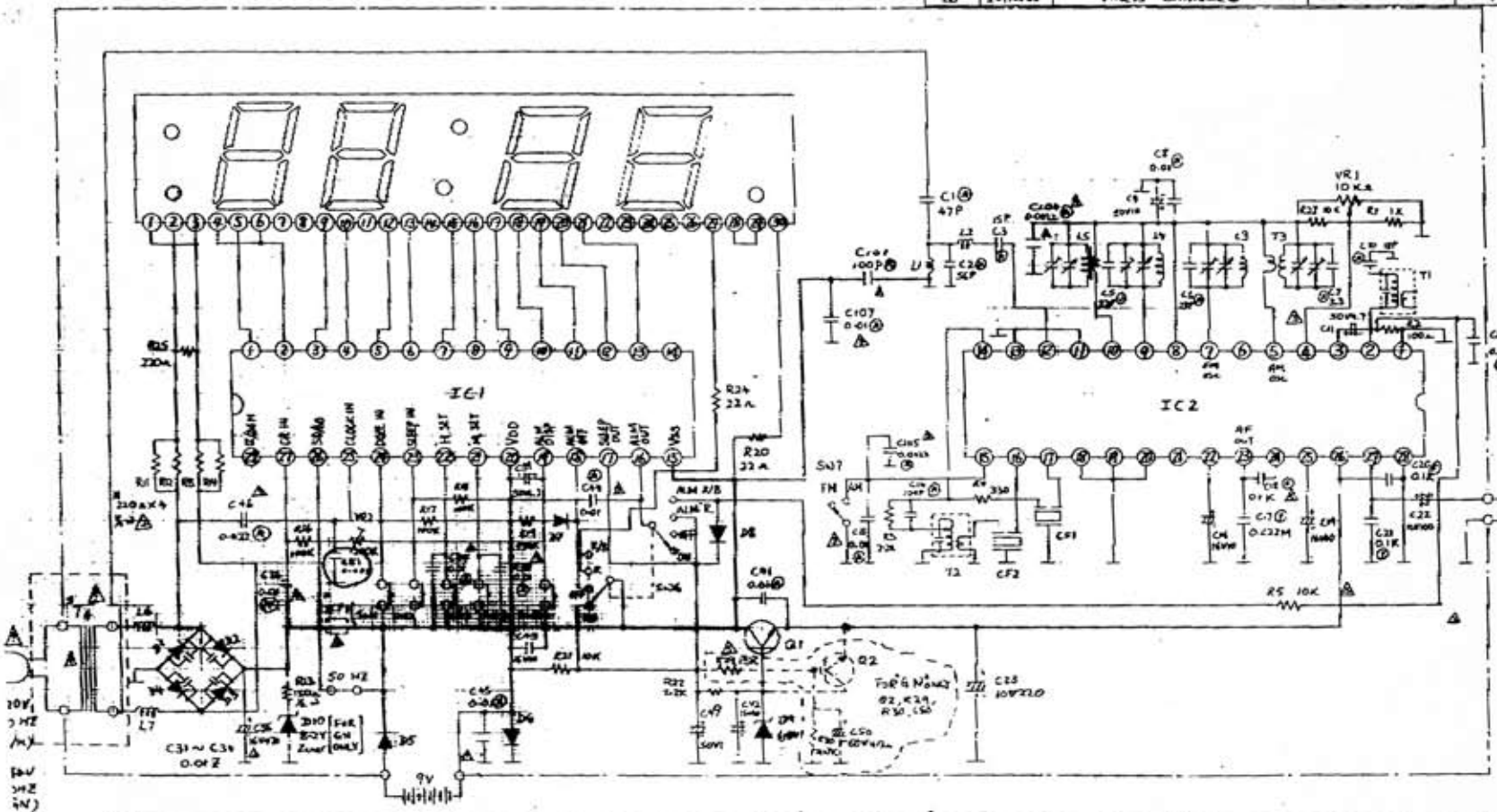

IC.1	LM8560B
IC.2	CXA1019M
D1,2,3,4	RVDNSR131
D5,6,7,8	RVDSS133
D9	RVDHZ6.8B
D10	RVDHZ15
L2	RLQY1853W3
L3	RLQ4YB4E
L5	RLF2C63
L6,7	RLQY1563W
T1	RLT4B153
T2	RLT2B467
T3	RLQ2B48M
CF1	RVFSFE1M
CF2	RVFB1M455
Q1	2SC2001R
VC1	RCV41C270K
*T4 (P/PC)	RLT5I7C40A
*T4 (GN)	RLT5I743A
*3CH (PC/GN)	RWTCPN5
*4CH (GN)	ECD25V3.3S1T

| | | | | | | |