Sym	Date	Revision	A	B	C	D	E	F	Changed From	Signed	Checked	Approved

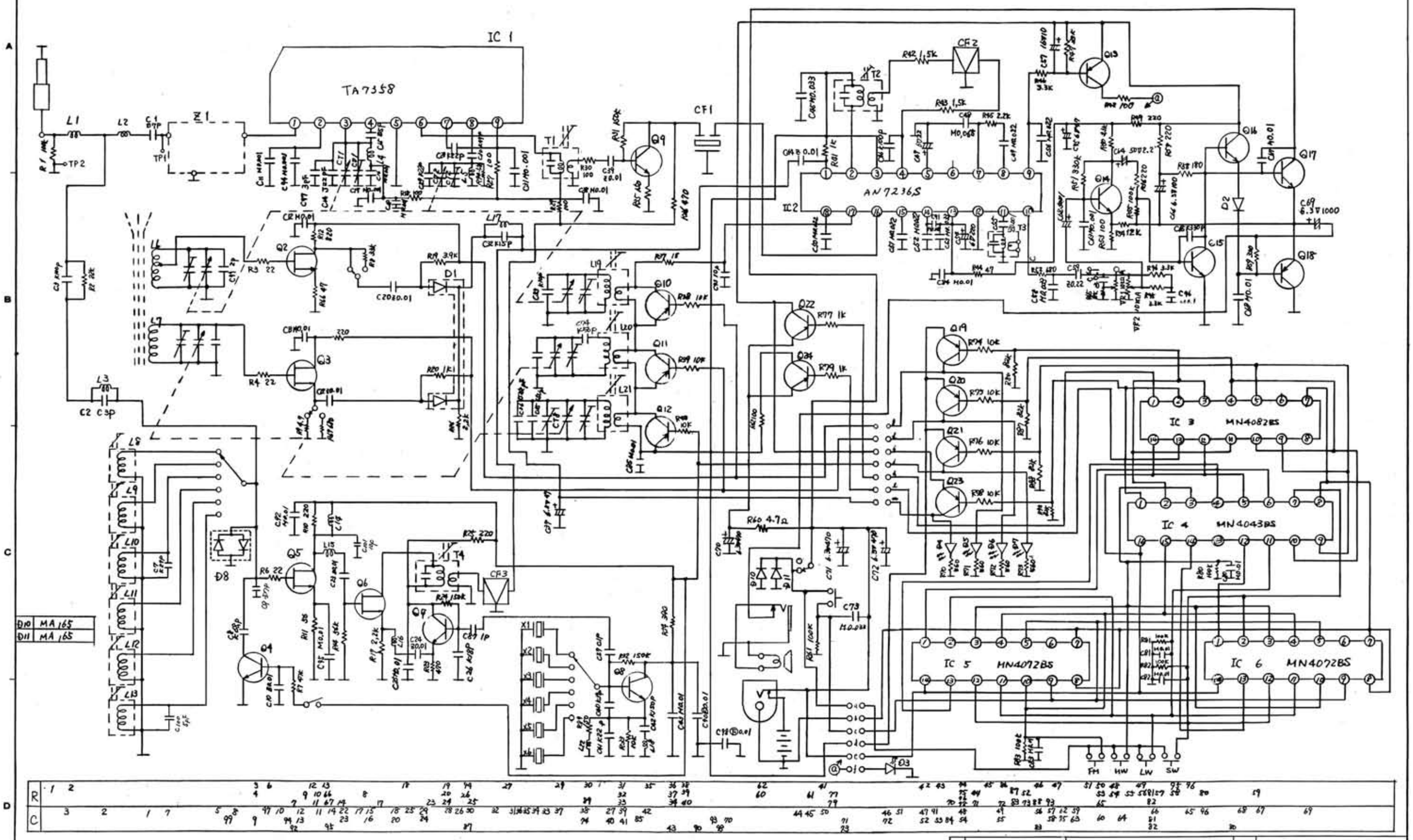

D10	MA165
D11	MA165

L1	RLQY2535-D	L9	RLA3A9-M	L16	RLQY1065-D	IC1	RDLTA7358P	Q3	2SK160K5	Q10	2SB709S	Q17	2SC2001K2	Q24	2SB709S	D7	LN247RPLF	X1	RVCC167750NRN
L2	RLQY3D31W-D	L10	RLA3A11-M	L17	RLQZA150K-D	IC2	AN7236S	Q4	2SC1009F4	Q11	2SB709S	Q18	2SA952K2	D1	MA151WK	D8	MA153	X2	RVCC179000NRN
L3	RLQY1005-D	L11	RLA3A11-M	L18	RLQZAR82K-D	IC3	MN4082BS	Q5	2SK193K	Q12	2SB709S	Q19	2SB709S	D2	MA27A2	D9	MA165	X3	RVCC20400NRN
L4	RLQ4N120-D	L12	RLA3A12-M	L19	RLQ2A10-M	IC4	MN4043BS	Q6	2SK184GR	Q13	2SA812HS	Q20	2SB709S	D3	LN25RPLF	T1	RL24A4-T	X4	RVCC22550NRN
L5	RLQ4N162-D	L13	RLA3A13-M	L20	RLQ1A3-M	IC5	MN4072BS	Q7	2SC1009F4	Q14	2SC1623LSA	Q21	2SB709S	D4	LN247RPLF	T2	RL22A8-T	X5	RVCC26050NRN
L6	RLF683-D	L14	RLQZB100K-D	L21	RLQ3A10-M	IC6	MN4072BS	Q8	2SC2295B	Q15	2SC1623LSA	Q22	2SB709S	D5	LN247RPLF	T3	RL24A4-T	X6	RVCC28425NRN
L8	RLA3A8-M	L15	RLQZA2R2K-D	L22	RLQZA102K-Y	Q2	2SK160K5	Q9	2SC1009F4	Q16	2SC1623LSA	Q23	2SB709S	D6	LN247RPLF	T4	RL24A4-T	Z1	RXABPHB6A

CF1	RVFJ07NAR	CF2	RVFSEP455B5	CF3	RVFJ075M1	CF4	RCFJ3YC4DW-S	CF5	RCFJ4LC4DW-S	CF6	RCFCTE3110	CF7	RVFJ0S5T02AM						

Sym	Item or Code No.	Material & Size	qt	Process

Model	RF-B20L
Parts No.	
Name	

Scale	Designed	Drawn	Traced	Checked	Approved
		Y. Tabata Aug. 1 '85		Y. Tabata	

MATSUSHITA ELECTRIC INDUSTRIAL CO.,LTD.GENERAL AUDIO DIVISION

3rd Angle System Unit:mm