Sym	Date	Revision	A	B	C	D	E	F	Changed From	Signed	Checked	Approved

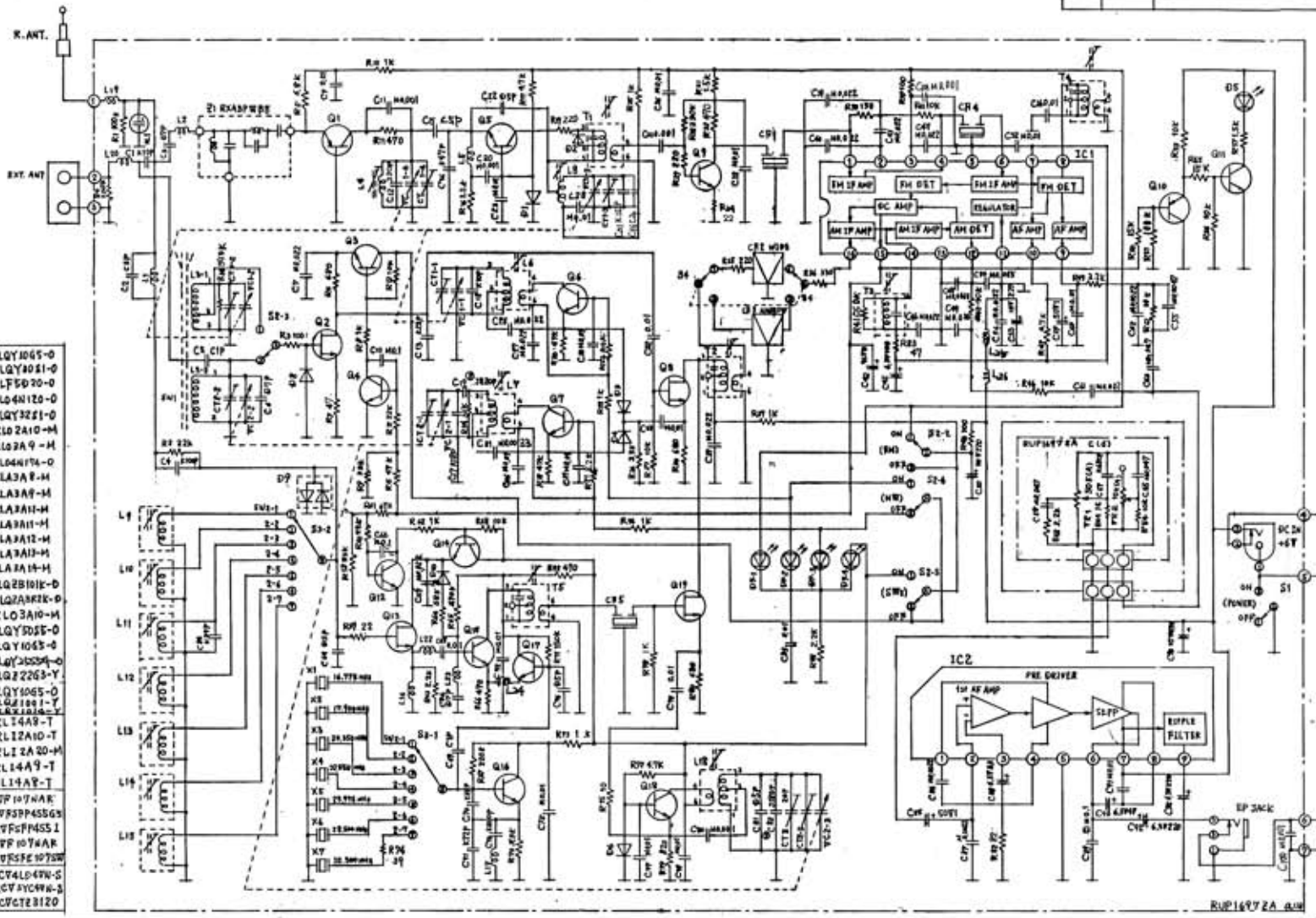

IC1	FM/AM IF & DET	RYIBA4220A
IC2	AF POWER AMP	RYILA4140

Q1	FM RF AMP	2SA1022C
Q2	MW/SW1 RF AMP	2SK160KS
Q3	MW/SW1 AGC	2SC1623LSA
Q4	〃	2SC1623LSA
Q5	FM CONV.	2SC2295B
Q6	MW OSC.	2SC1009F4
Q7	SW1 OSC	2SC1009F4
Q8	MW/SW1 MIX.	2SK184Y
Q9	FM IF AMP	2SC1009F4
Q10	PC AMP	2SA812M5
Q11	DC AMP	2SC1623L6A
Q12	SW2 AGC	2SC1623L5A
Q13	SW2 RF AMP	2SK104F
Q14	SW2 AGC	2SC1623L5A
Q15	SW2 1st MIX	2SC2295B
Q16	SW2 1st OSC	2SC2295B
Q17	SW2 BUFFER	2SC1008Q
Q18	SW2 2nd OSC	2SC2295B
Q19	SW2 2nd MIX	2SK184Y

D1	FM AGC	RYDKB265E
D2	FM P.AGC	MA150
D3	SWITCHING	RYD15553
D4	〃	RYD15553
D5	TUNING IND	LN224RPH
D6	SW2 AGC	RYDKB265E
D7	BAND IND.	LN042157PH
D8	PROTECTER	MA150
D9	〃	MA153
D10	SW2-4 AAGC	RYDKB265G

L1	RLQY1065-0	
L2	RLQY1051-0	
L3	RLF5D20-0	
L4	RLQ4N120-0	
L5	RLQY3251-0	
L6	RLO2A10-M	
L7	RLO2A9-M	
L8	RLO4N174-0	
L9	RLA3A8-M	
L10	RLA3A9-M	
L11	RLA3A11-M	
L12	RLA3A11-M	
L13	RLA3A12-M	
L14	RLA3A13-M	
L15	RLA3A14-M	
L16	RLQ2B101K-0	
L17	RLQ2A8R2K-0	
L18	RLO3A10-M	
L19	RLQY5055-0	
L20	RLQY1063-0	
L21	RLQY3055-0	
L22	RLQ2226J-Y	
L23	RLQY1065-0	
L24	RLQ2101J-Y	
T1	RL14A9-T	
T2	RL12A10-T	
T3	RL12A20-M	
T4	RL14A9-T	
T5	RL14A8-T	
CF1	RFP107WAR	
CF2	RFS3PP455G3	
CF3	RFSFPM455J	
CF4	RFP107WAR	
CF5	RFSFE107SW	
VC1	RCT4L0470W-S	
VC2	RCTAYC490W-S	
CT3	RCTGT28120	

- S1 : POWER ON/OFF SWITCH NOW "OFF"
- S2-1~S2-2 : BAND SELECT SWITCH NOW "FM"
- S3-1~S3-2 : SW2-4 BAND SWITCH NOW "SW3"
- S4-1~S4-2 : AM BAND WIDTH SWITCH NOW "WIDE"
- RESISTER TOLERANCE --- NO MARK = ±(±5%)
- CAPACITOR
  - ⓟ MARK : POLYPROPYLENE CAPACITOR
  - ⓣ MARK : TF CAPACITOR
  - ⓜ MARK : MICA CAPACITOR
  - TOLERANCE --- NO MARK = ±(+50, -20%)

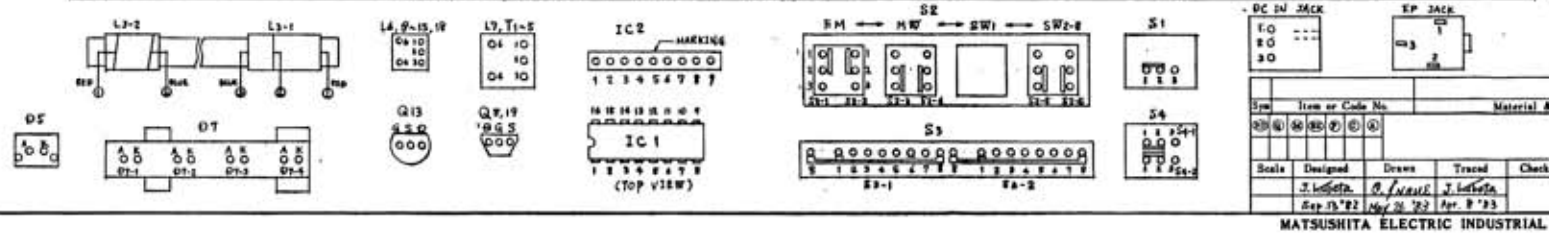

Sym	Item or Code No.	Material & Size	qt	Process

Scale	Designed	Drawn	Traced	Checked	Approved
	J. Kobata Sep 15 '82	R. Iwasaki May 26 '83	J. Kobata Apr. 8 '83		

Model: RF-B50-(W)

Parts No.: SCHEMATIC DIAGRAM

Name:

MATSUSHITA ELECTRIC INDUSTRIAL CO.,LTD. RADIO DIVISION

3rd Angle System Unit mm