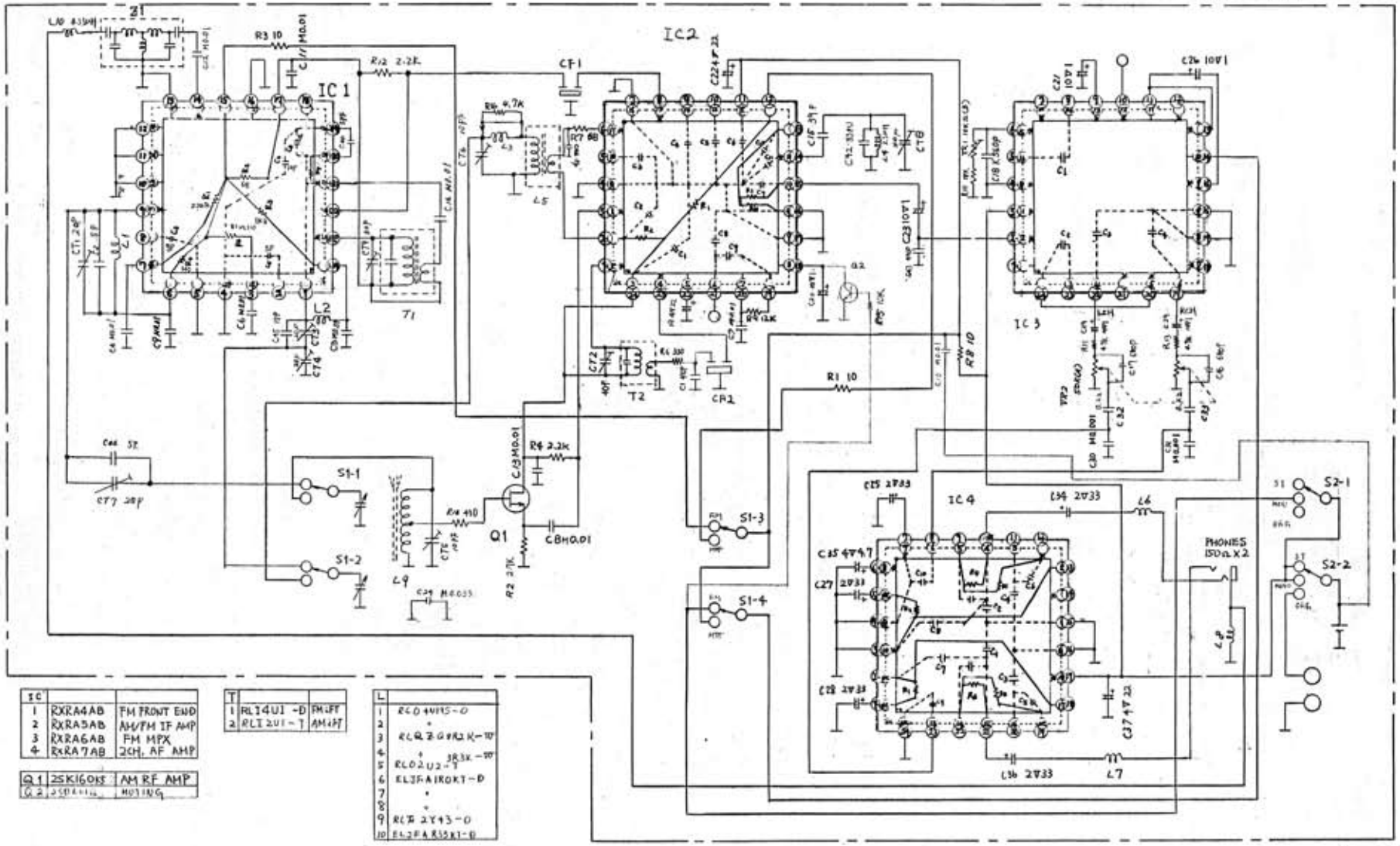

IC		
1	RXRA4AB	FM FRONT END
2	RXRA5AB	AM/FM IF AMP
3	RXRA6AB	FM MPX
4	RXRA7AB	2CH. AF AMP

Q1	2SK160KS	AM RF AMP
Q2	2SD[illegible]	MUTING

T		
1	RL14U1 -D	FM IFT
2	RL12U1 -T	AM IFT

L	
1	RLQ4U195-0
2	+
3	RLQ2G[illegible]K-10
4	+
5	RLQ2U2-[illegible]
6	ELJFA1R0KT-D
7	+
8	+
9	RLT2Z43-0
10	ELJFA[illegible]-D

Sym	Date	Revision	A	B	C	D	E	F	Changed From	Signed	Checked	Approved

Sym	Item or Code No.	Material & Size	Process

Scale	Designed	Drawn	Traced	Checked	Approved
	Jun.31 '84	Jun.31 '84			

Model: RF-H25 (H)

Parts No.: SCHEMATIC DIAGRAM

MATSUSHITA ELECTRIC INDUSTRIAL CO.,LTD.RADIO ISION