Sym	Date	Revision	A	B	C	D	E	F	Changed From	Signed	Checked	Approved

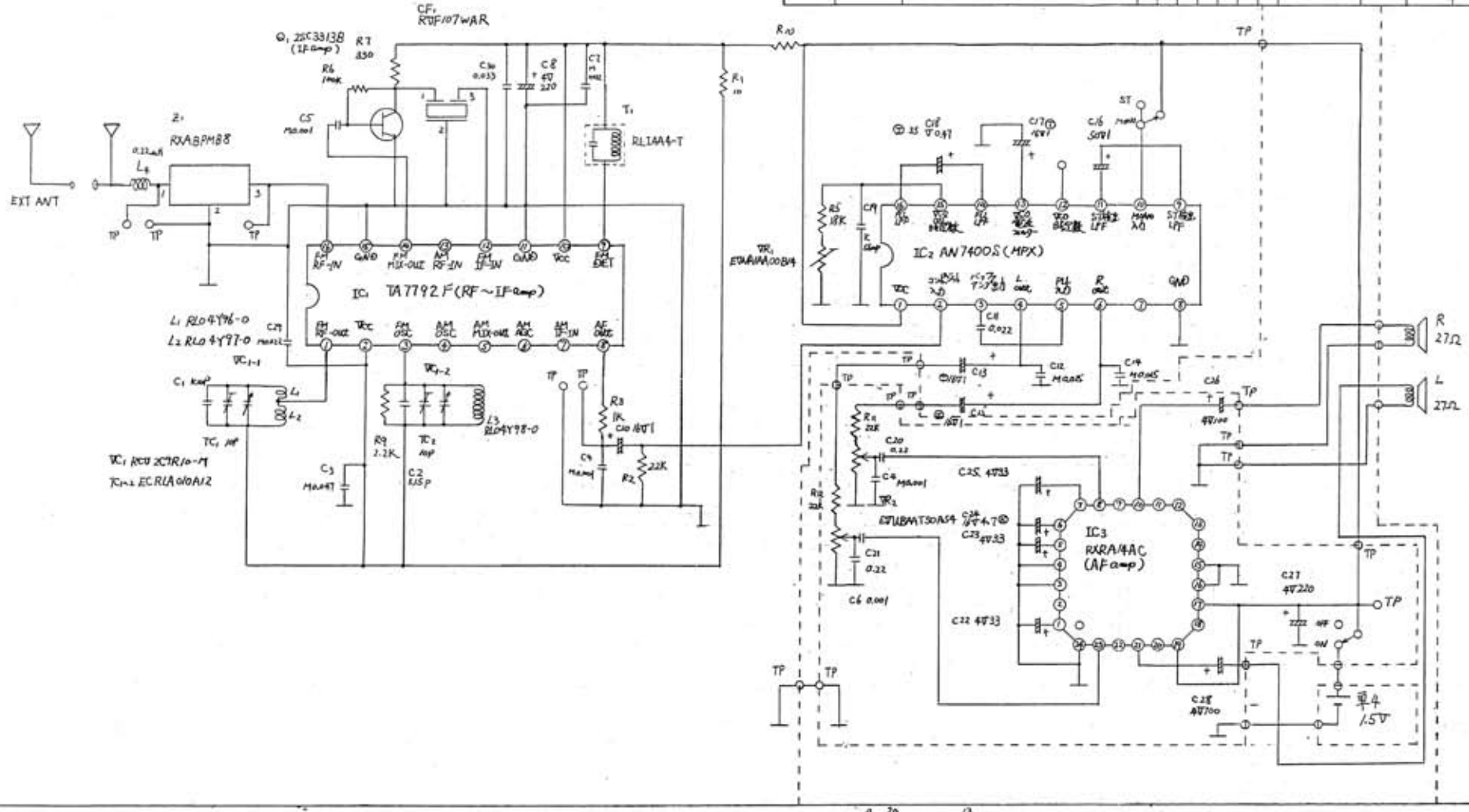

C No	1	29	5	3	2	30	8	9	10	6	4	20	19	21	18	13	15	11	17	12	16	14
R No	6	7	9			3	2		1		10	5										

Sym	Item or Code No.	Material & Size	qt	Process

Scale	Designed	Drawn	Traced	Checked	Approved

Model: RF-H3-M

Parts No.

Name

MATSUSHITA ELECTRIC INDUSTRIAL CO.,LTD.GENERAL AUDIO DIVISION

3rd Angle System Unit:mm