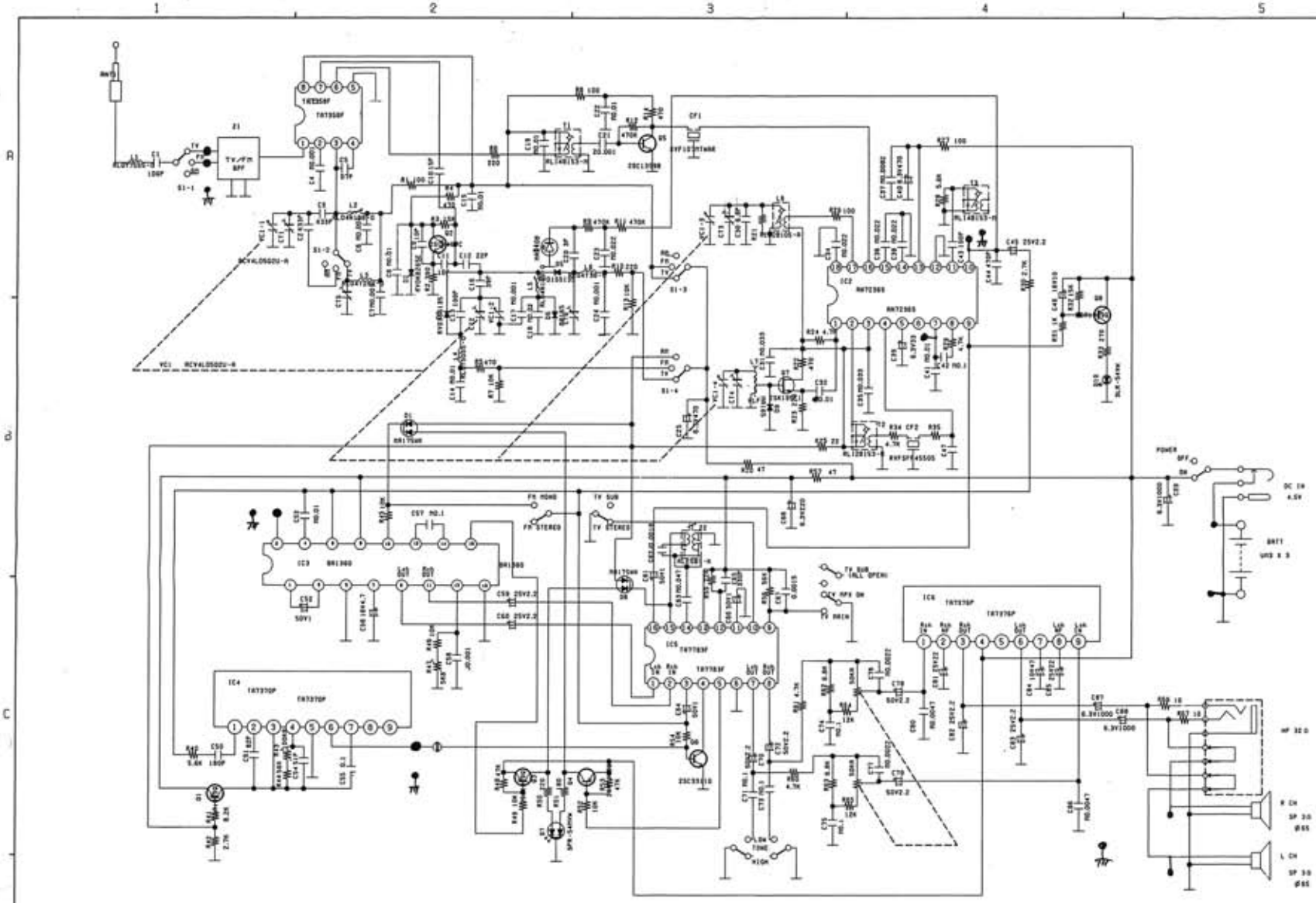

Q1	2SA1309Q	SW
Q2	2SC1407C	TV/FM OSC.
Q3	2SA1309Q	SW
Q4	2SA1309Q	SW
Q5	2SC1359B	IF AMP
Q6	2SC3311Q	SW
Q7	2SK195FI	AM RF AMP
Q8	2SA1309Q	SW
D1	MA175WK	SW
D2	RVOK826SE	VARISTER
D3	RVD155135	RF SW
D4	MA842B	TV AFC
D5	RVD155135	RF SW
D6	MA165	BIAS
D7	SPR-54MVW	ST/BIL. LED
D8	MA175WK	SW
D9	MA165	PROTECTOR
D10	SLR-54VW	TUNE.LED
IC1	TA7358F	FM FRONT END
IC2	AN7236S	IF
IC3	BA1360	FM MPX
IC4	TA7370P	JI.SK PLL
IC5	TA7783F	TV SOUND MPX
IC6	TA7376P	DUAL AF
L1	RLQ7555-0	LOADING
L2	RLQ4N188-0	FM ANT
L3	RLQ4T254-0	TV ANT
L4	RLQ7505S-0	
L5	RLQ4N189-0	FM OSC
L6	RLQ4T38-0	TV OSC
L7	RLF	FERRITE ANT
L8	RLQ28105-A	AM OSC
T1	RL148153-M	FM IFT
T2	RL128153-M	AM IFT
T3	RL148153-M	FM DET
Z1		
Z2	RLE581-K	TV SUB BPF
CT5		
CT6		
VC1	RCV4L05Q2U-A	
CF1	RVF107MTWAR	FM 10.7M
CF2	RVFSFP455D5	AM 455KHz

Sym	Item or Code No.	Material & Size	qt	Process

Scale	Designed	Drawn	Traced	Checked	Approved
	T.NUMAMATA				
	JUL.30 1985				

Model: RF-U75-J

Parts No.:

Name: SCHEMATIC DIAGRAM

MATSUSHITA ELECTRIC INDUSTRIAL CO.,LTD.GENERAL AUDIO DIVISION