| Sym | Date | Revision | A 1 | A 2 | B | C | D | E | F | Changed From | Signed | Checked | Approved |
|---|---|---|---|---|---|---|---|---|---|---|---|---|---|
| | | | | | | | | | | | | | |
| | | | | | | | | | | | | | |
| | | | | | | | | | | | | | |

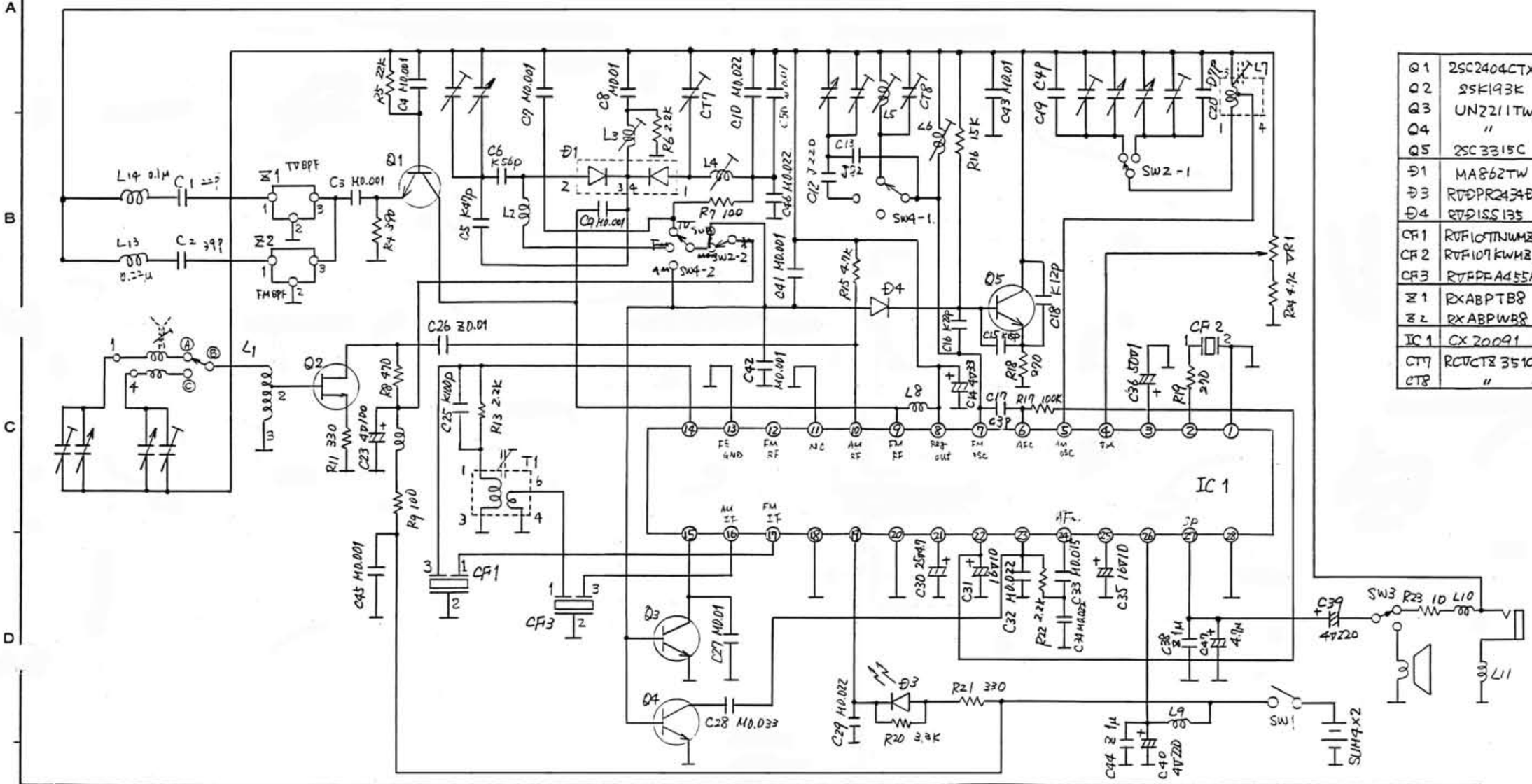


| | | |
|---|---|---|
| Q1 | 2SC2404CTX | FM/TV RF AMP |
| Q2 | 2SK193K | MW RF AMP |
| Q3 | UN2211TW | SWITCHING |
| Q4 | " | " |
| Q5 | 2SC3315C | FM/TV OSC AMP |
| D1 | MA862TW | SWITCHING |
| D3 | RVDPR2434D | TUNNING LED |
| D4 | RVDISS135 | SWITCHING |
| CF1 | RVFI07TNWM21 | |
| CF2 | RVFI07KWH21 | |
| CF3 | RVFPEA455A | |
| Z1 | RXABPTB8 | |
| Z2 | RXABPWB8 | |
| IC1 | CX20091 | |
| CT7 | RCVCTZ3510 | |
| CT8 | " | |

| | |
|---|---|
| L1 | RLF2Y52-0 |
| L2 | ELJFA2R2KT-D |
| L3 | RL04N226-0 |
| L4 | RL04Y67W-0 |
| L5 | RL04Y135-0 |
| L6 | RL04N226-0 |
| L7 | RL02A24 |
| L8 | RLQZP2R2ML-Y |
| L9 | RLL300040-0 |
| L10 | ELJFA1R0KT-D |
| L11 | " |
| L12 | RLQZP101KL-Y |
| L13 | ELJFAR22KT-D |
| L14 | ELJFA R10KT-D |

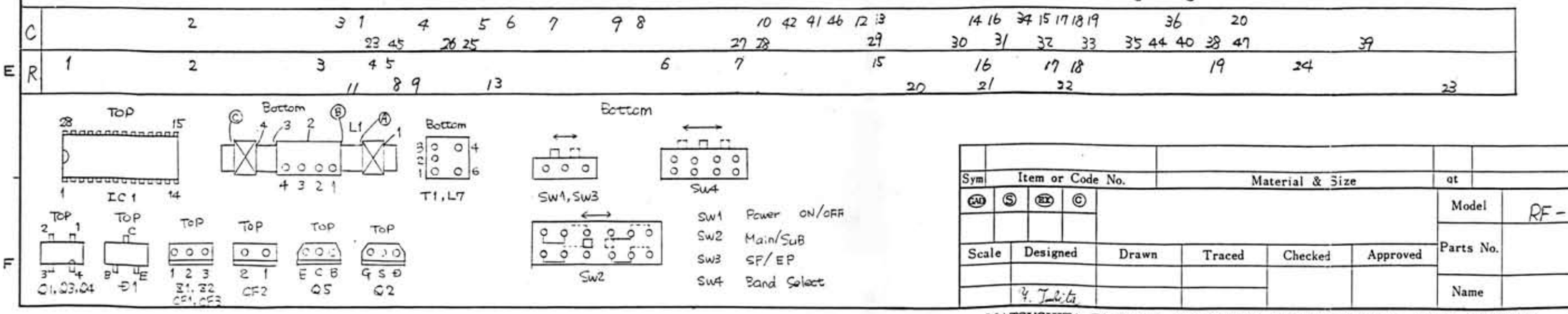


| Sym | Item or Code No. | Material & Size | qt | Process |
|---|---|---|---|---|
| CAD | S | RX | C | |

| Scale | Designed | Drawn | Traced | Checked | Approved |
|---|---|---|---|---|---|
| | Y. Ichita | | | | |

| | |
|---|---|
| Model | RF-13D-J |
| Parts No. | |
| Name | |

MATSUSHITA ELECTRIC INDUSTRIAL CO.,LTD. GENERAL AUDIO DIVISION

3rd Angle System Unit:mm