Sym	Date	Revision	A	B	C	D	E	F	Changed From	Signed	Checked	Approved

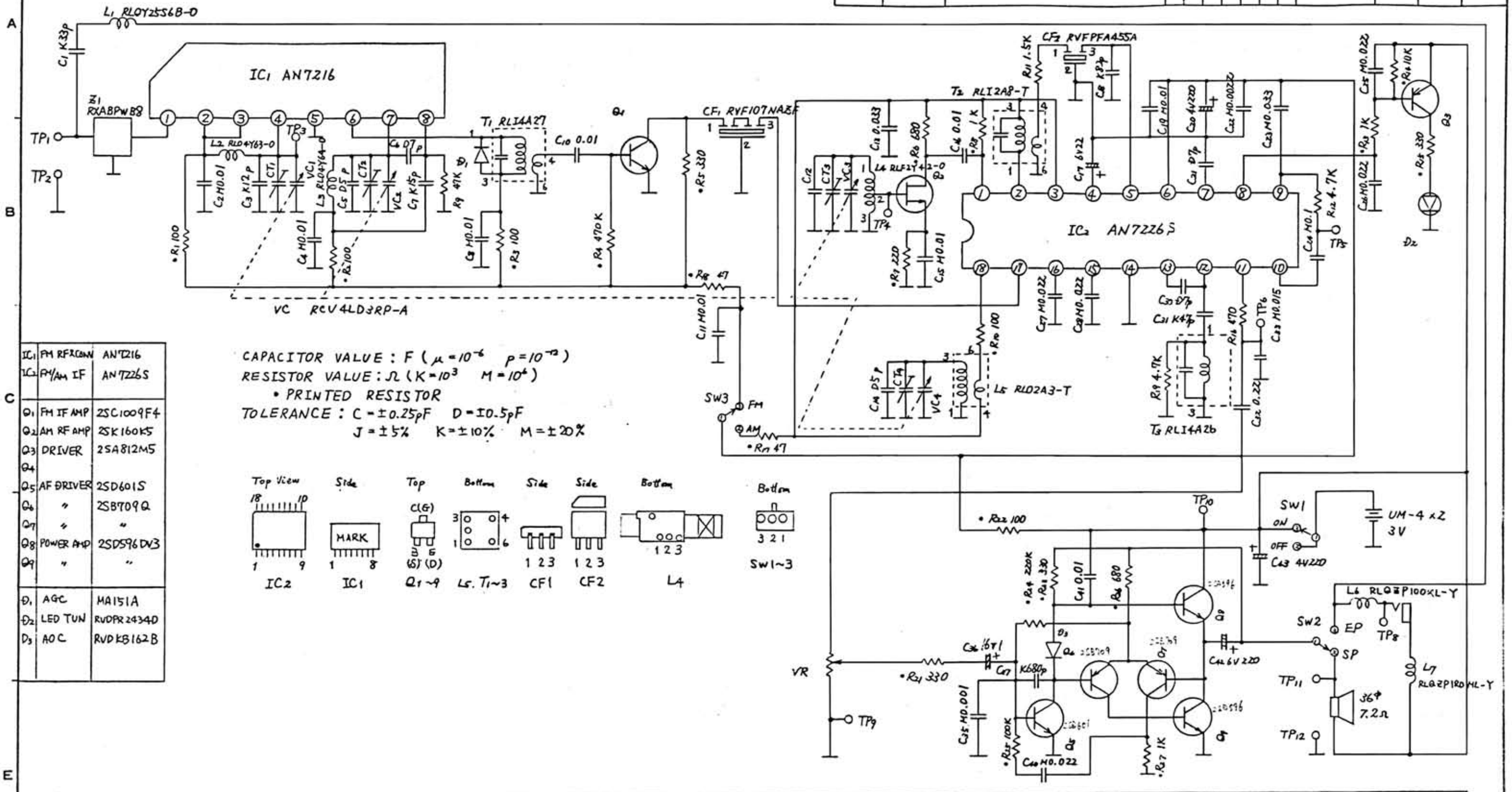

IC1	FM RF/CONV	AN7216
IC2	FM/AM IF	AN7226S
Q1	FM IF AMP	2SC1009F4
Q2	AM RF AMP	2SK160K5
Q3	DRIVER	2SA812M5
Q4		
Q5	AF DRIVER	2SD601S
Q6	"	2SB709Q
Q7	"	"
Q8	POWER AMP	2SD596DV3
Q9	"	"
D1	AGC	MA151A
D2	LED TUN	RVDPR2434D
D3	AOC	RVDKB162B

C	1	2	3	4	5	6	7	8	10	11	13	14	15	16	35	36	37	40	27	28	17	18	41	34	20	21	30	31	42	32	43	22	23	24	26	25
R	1	2	3	4	5	18	17	7	6	21	8	10	22	25	24	23	11	26	27	19	16	12	13	14	15											

Sym	Item or Code No.	Material & Size	at	Process

Scale	Designed	Drawn	Traced	Checked	Approved
	O. Ginice Apr 9 '84				

Model	RF-12-(J)
Parts No.	
Name	

MATSUSHITA ELECTRIC INDUSTRIAL CO,LTD.RADIO DIVISION

3rd Angle System Unit:mm