Sym	Date	Revision	A 1	A 2	B	C	D	E	F	Changed From	Signed	Checked	Approved

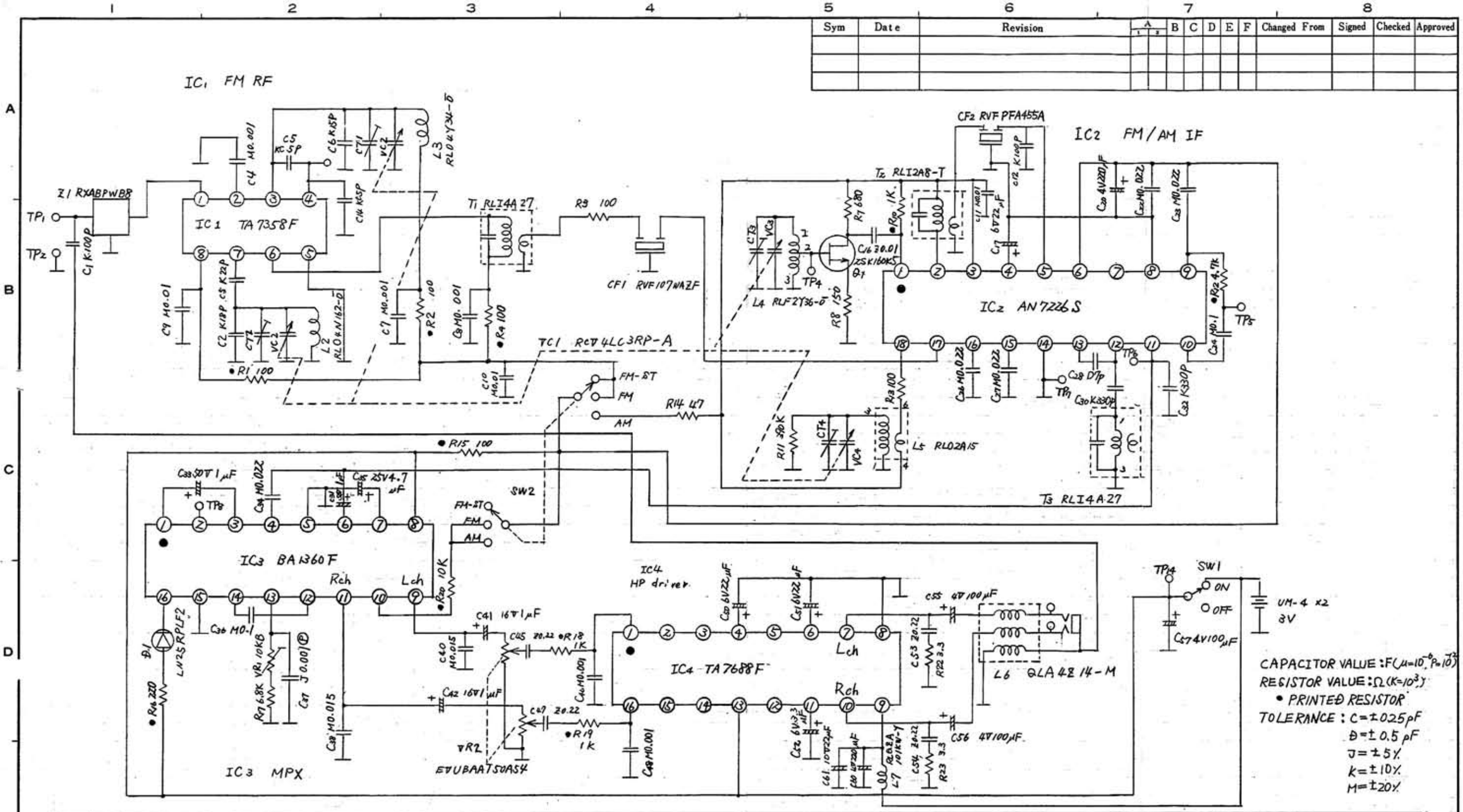

| | | | | | | | | | | | | |