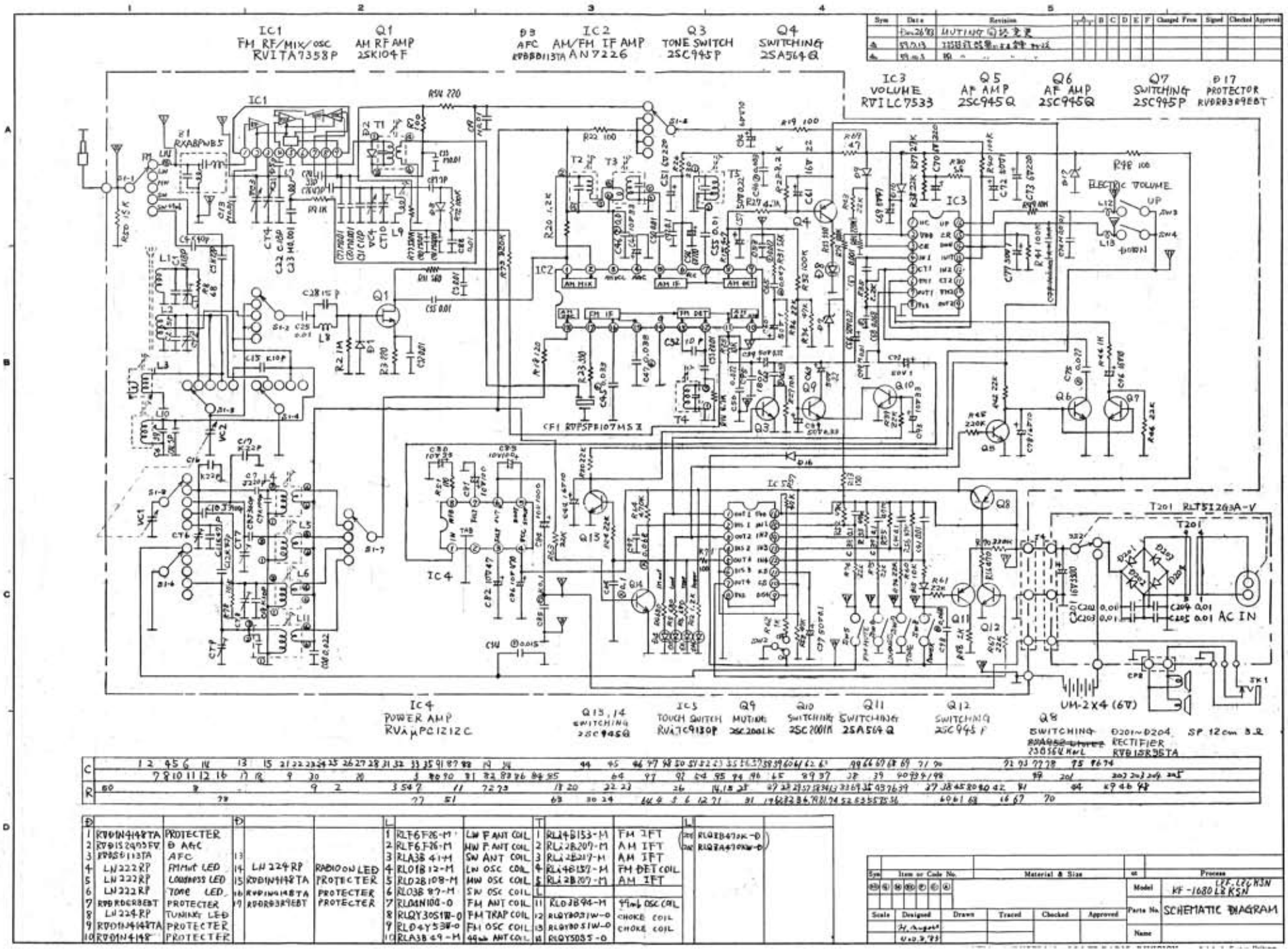
IC1 FM RF/MIX/OSC RVITA7358P
Q1 AM RF AMP 2SK104F
D3 AFC
IC2 AM/FM IF AMP AN7226
Q3 TONE SWITCH 2SC945P
Q4 SWITCHING 2SA564Q
IC3 VOLUME RVILC7533
Q5 AF AMP 2SC945Q
Q6 AF AMP 2SC945Q
Q7 SWITCHING 2SC945P
D17 PROTECTOR
ELECTRIC VOLUME
UP
AC IN
T201 RLT51203A-V
UM-2X4 (6V)
IC4 POWER AMP RVAμPC1212C
Q13, 14 SWITCHING 2SC945Q
IC5 TOUCH SWITCH RVAJC9130P
Q9 MUTING 2SC2001K
Q10 SWITCHING 2SC2001K
Q11 SWITCHING 2SA564Q
Q12 SWITCHING 2SC945P
Q8 SWITCHING
D201~D204 RECTIFIER RVB150R35TA
SP 12cm 8Ω
CF1 RVPSFB107MSZ
Model KF-1680LZ KSN
Parts No. SCHEMATIC DIAGRAM
Name