SYM	DATE	REVISION	A	B	C	D	E	F	CHANGED FROM	SIGNED	CHECKED	APPROVED

MAIN UNIT

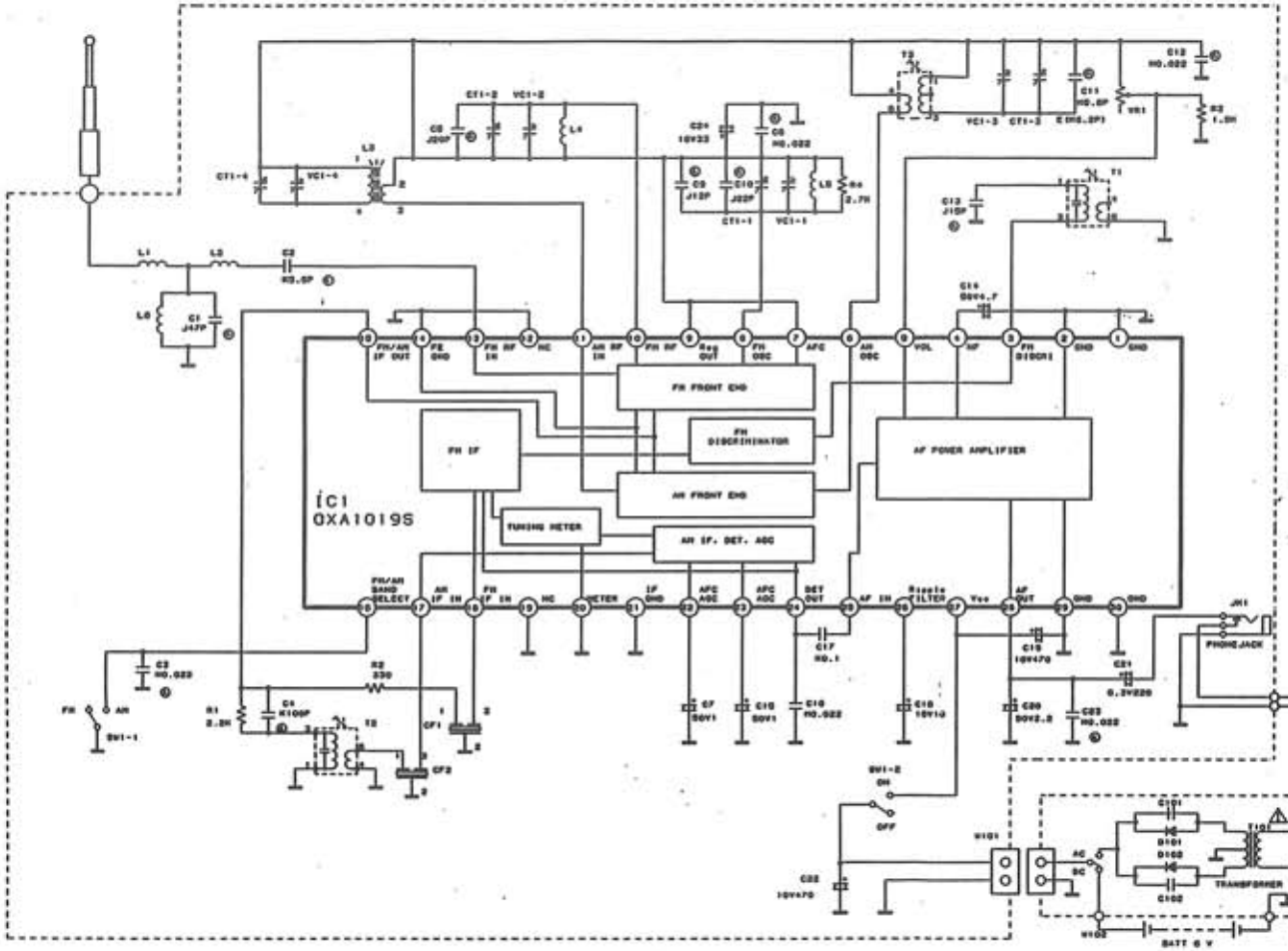

IC1	CXA1019S	IC
D101	RVD15R130TA	RECTIFIER
D102	RVD15R130TA	RECTIFIER
D103	RVD15R130TA	RECTIFIER (E,EB,EG,GN,G-S)
D104	RVD15R130TA	RECTIFIER (E,EB,EG,GN,G-S)
T1	RLI48153-H	TRANSFORMER,FM IFT
T2	RLI28201-H	TRANSFORMER,AM IFT
T3	RLO25110-H	TRANSFORMER,AM OSC
L1	RLG10000	
L2	RLG10000	
L3	RLV20005-02	FERRITE ANT (P,PC)
L3	RLF20203-02	FERRITE ANT (E,EB,EG,GN,G-S)
L4	PRINTED COIL	
L5	RLG11100	FM OSC COIL
L6	RLG4N214-0	FM OSC COIL (E)(S)
L6	RLG11100	FM OSC COIL (S)
L6	PRINTED COIL	
L101	RLCZ61FGHT-0	CHOKE COIL (E,EB,EG,GN)
L102	RLCZ61FGHT-0	CHOKE COIL (E,EB,EG,GN)
CF1	RVF107VDZT	CERAMIC FILTER,FM
CF2	RVFBF101DDS	CERAMIC FILTER,AM (P,PC,GN,G-S)
CF3	RVFBF101DDS	CERAMIC FILTER,AM (E,EB,EG)
VC1	RC4VPC10V-H	VARICON (P,PC,GN,S)
VC1	RC3VLC10V-H	VARICON (E,EB,EG)
VC1	RC3VLS10V-H	VARICON (S)
JK1	RJJJH02A-H	HEADPHONE JACK
JK101	RJJJE02-H	AC IN JACK
VR1	EV,P5AF10B14	V.R.VOLUME
SW1	RS63E46XA-H	SWITCH FM/AM/OFF
SW2	RSR26A01S-H	VOLTAGE SELECTOR (S)
T101	RTP111C002-V	POWER TRANSFORMER (P,PC)
T101	RTP111C003-V	POWER TRANSFORMER (G)
T101	RTP111S002-V	POWER TRANSFORMER (E,EB,EG,GN)
T101	RTP111J002-V	POWER TRANSFORMER (S)
F1	RSA1C10HBAL	FUSE (PC)
F1	RSA2C025T00	FUSE (E,EB,EG,GN)

IMPORTANT SAFETY NOTICE

THE PARTS WITH ⚠ MARK ON THIS SCHEMATIC DIAGRAM INCORPORATE SPECIAL FEATURES IMPORTANT FOR SAFETY. WHEN SERVICING, IT IS ESSENTIAL THAT ONLY MANUFACTURER'S SPECIFIED PARTS BE USED FOR THE CRITICAL COMPONENTS IN THE PARTS WITH ⚠ MARK OF THE SCHEMATIC.

| | | | | | | | | | | | |