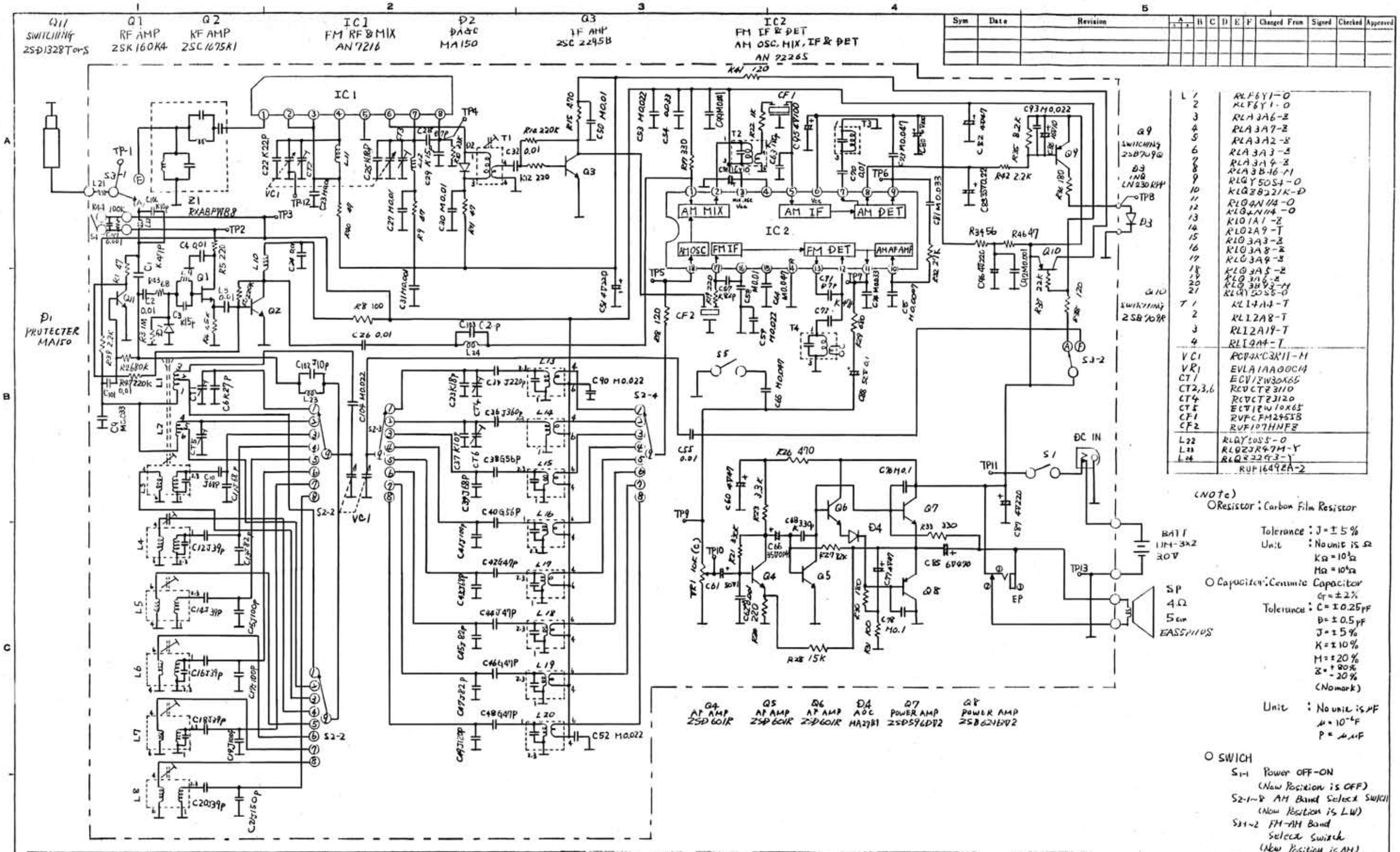

Sym	Date	Revision	A	B	C	D	E	F	Changed From	Signed	Checked	Approved

L 1	RLF6Y1-0
2	RLF6Y1-0
3	RLA3A6-Z
4	RLA3A7-Z
5	RLA3A2-Z
6	RLA3A3-Z
7	RLA3A4-Z
8	RLA3B16-M
9	RLQY505-0
10	RLQ8221K-D
11	RLQ4N114-0
12	RLQ4N114-0
13	RL01A1-Z
14	RL02A9-T
15	RL03A3-Z
16	RL03A8-Z
17	RL03A9-Z
18	RL03A5-Z
19	RL03A6-Z
20	RL03B93-M
21	RLQY505-0
T 1	RL14A4-T
2	RL12A8-T
3	RL12A19-T
4	RL14A4-T
VC1	RCD4KC3K11-M
VR1	EVLA1AA00C14
CT1	ECV12W30X65
CT2,3,6	RCDCT23110
CT4	RCDCT23120
CT5	ECT12W10X65
CF1	RVFCFM2455B
CF2	RVF107HNFB
L22	RLQY505-0
L23	RLQ23R47M-Y
L24	RLQ2269-3-Y
	RVF1649ZA-2

(NOTE)

○ Resistor : Carbon Film Resistor

Tolerance : J = ±5%

Unit : No unit is Ω, KΩ = 10^3Ω, MΩ = 10^6Ω

○ Capacitor : Ceramic Capacitor

Tolerance : C = ±0.25pF, D = ±0.5pF, J = ±5%, K = ±10%, M = ±20%, Z = +80% −20% (No mark)

Unit : No unit is μF, μ = 10^{-6}F, P = μμF

○ SWICH

S1-1 Power OFF-ON (Now Position is OFF)

S2-1~8 AM Band Select Switch (Now Position is LW)

S3-1~2 FM-AM Band Select Switch (Now Position is AM)

S4 DX-LOCAL Select Switch (Now Position is Local)

S5 TONE Switch (Now Position is HIGH)

Sym	Item or Code No.	Material & Size	Qt	Process
			Model	RF-9L-(X),(XG)
			Parts No.	SCHEMATIC DIAGRAM
			Name	

Scale	Designed	Drawn	Traced	Checked	Approved
	Feb.16'83 K. Nagase	T. Kodowaki		P. Iwata	M. Fujii

MATSUSHITA ELECTRIC INDUSTRIAL CO,LTD.RADIO DIVISION

3rd Angle System Unit:mm