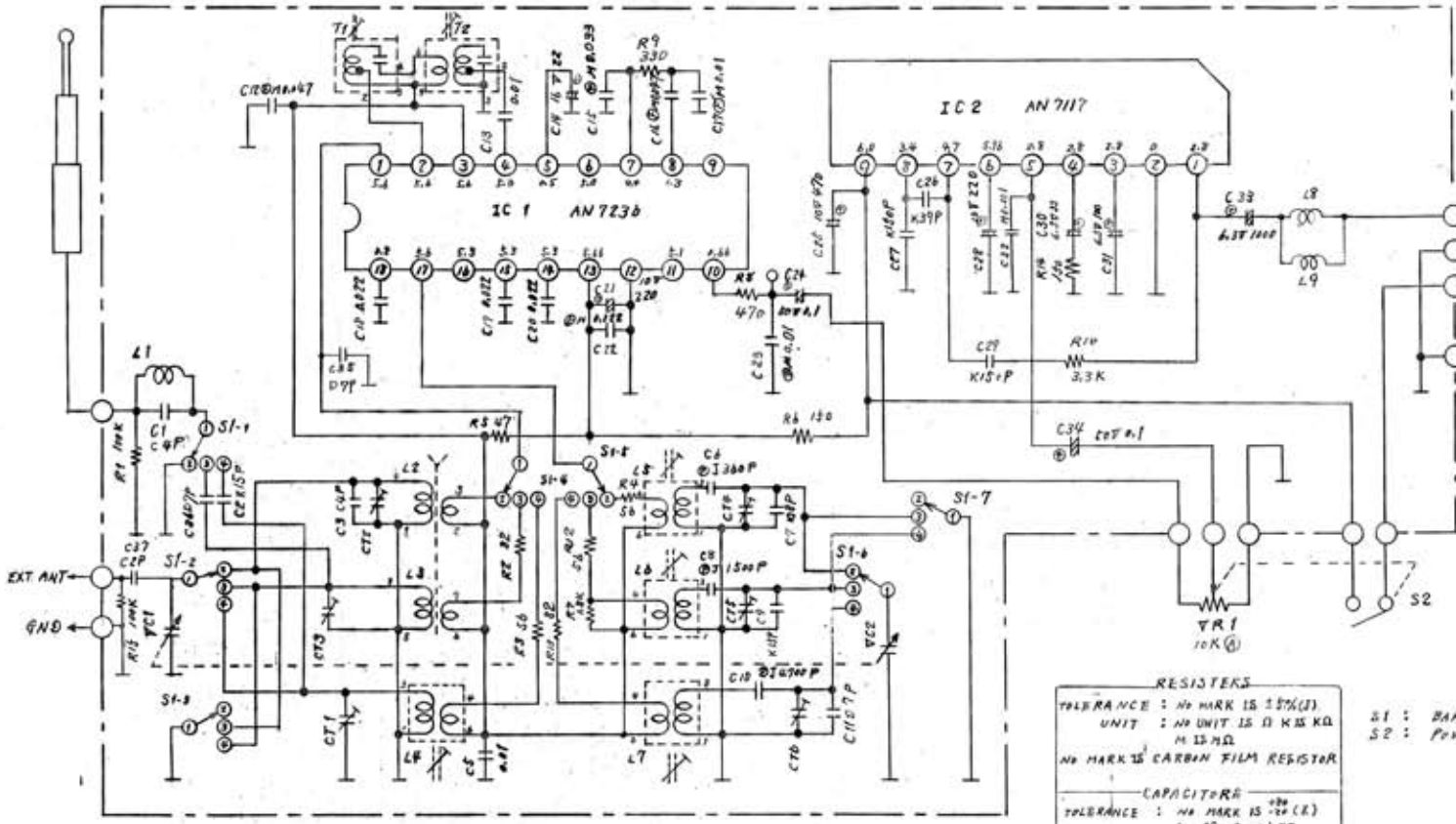

IC1	AN7236
IC2	AN7117
VC1	RCV2R2V1K-M
CT1	RCV15T10A
CT4	RCV12U F
L1	RLQY75SE-0
L2	RLF 5E97-0
L3	RLF 5E97-0
L4	RLA385M
L5	RLQ28102-M
L6	RLQ2891-M
L7	RLQ2896-M
L8	RLQ2D101K-Y
L9	RLQ2D101K-Y
T1	RLI2B207-M
T2	RLI2B217-M
VR1	ERH8PD095A14

RESISTERS
TOLERANCE : No MARK IS ±5%(J)
UNIT : No UNIT IS Ω K IS KΩ
M IS MΩ
No MARK IS CARBON FILM RESISTOR

CAPACITORS
TOLERANCE : No MARK IS +80 -20 (Z)
C IS ±0.25 PF
D IS ±0.5 PF
J IS ±5%
K IS ±10%
M IS ±20%
UNIT : No UNIT IS μF
P IS PF
No MARK IS CERAMIC CAPACITORS OR CHEMICAL CAPACITORS
Ⓢ MARK IS SEMICONDUCTIVE CAPACITORS
Ⓟ MARK IS POLYPROPYLENE FILM CAPACITORS

S1 : BAND SELECTOR SW NOW POSITION IS MW
S2 : POWER ON/OFF SW NOW POSITION IS OFF

Sym	Date	Revision	A	B	C	D	E	F	Changed From	Signed	Checked	Approved

Sym	Item or Code No.	Material & Size	at	Process

Scale	Designed	Drawn	Traced	Checked	Approved
	M. Sasaki 26 May '87		M. Sasaki 27 Aug '87		

Model: RE-4430 KNP KSN
Parts No.
Name

MATSUSHITA ELECTRIC INDUSTRIAL CO.,LTD.GENERAL AUDIO DIVISION
3rd Angle System Unit:mm