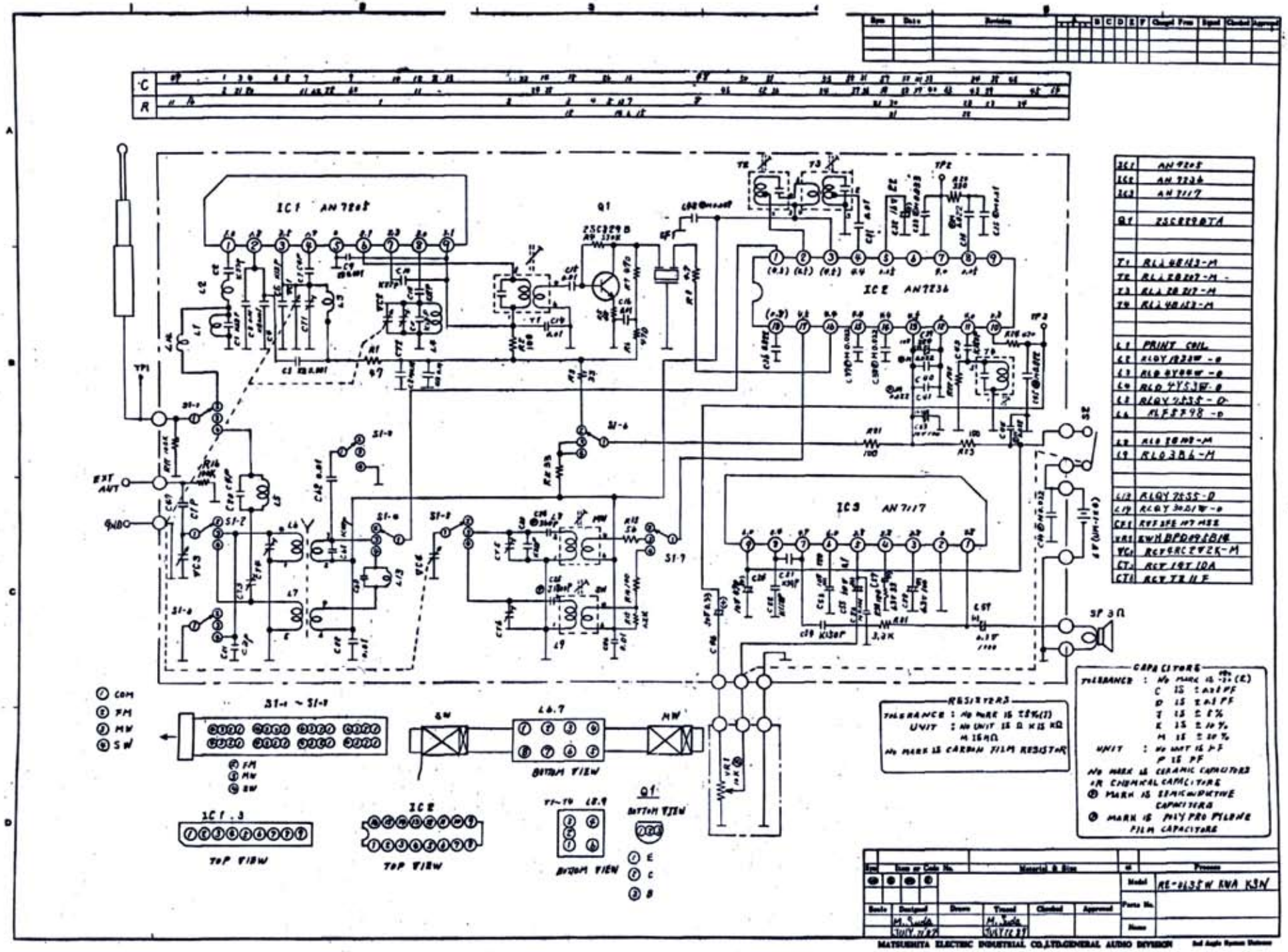
IC1 AN7205
IC2 AN7236
IC3 AN7117
Q1
2SC829 B
EXT ANT
GND
SP 3Ω
S1-1 ~ S1-9
COM
FM
MW
SW
TOP VIEW
BOTTOM VIEW
E
C
B
IC1 AN7205
IC2 AN7236
IC3 AN7117
Q1 2SC829BTA
T1 RL1-8R43-M
T2 RL1-8R07-M
T3 RL1-8R07-M
T4 RL1-8R43-M
L1 PRINT COIL
L2 RLQY1823W-0
L3 RLQ4Y08W-0
L4 RLQ4Y53W-0
L5 RLQY2535-0
L6 RLF8798-0
L8 RLQ3B09-M
L9 RLQ3B6-M
L12 RLQY2535-0
L13 RLQY3035W-0
CF1 RFS3FE457M5E
VR1 RWH8P09R6B18
VC1 RCV8RC8V2K-M
CT1 RCV1S7IDA
CT2 RCV7B11F
CAPACITORS
TOLERANCE : No mark is ±20% (K)
C is ±0.25 PF
D is ±0.5 PF
J is ±5%
K is ±10%
M is ±20%
UNIT : No unit is pF
P is PF
No mark is CERAMIC CAPACITORS OR CHEMICAL CAPACITORS
● mark is SEMICONDUCTIVE CAPACITORS
● mark is POLYPROPYLENE FILM CAPACITORS
RESISTORS
TOLERANCE : No mark is ±5%(J)
UNIT : No unit is Ω K is KΩ M is MΩ
No mark is CARBON FILM RESISTOR
Model RE-8135W RWA K3N
MATSUSHITA ELECTRIC INDUSTRIAL CO.,LTD.GENERAL AUDIO DIVISION