ONKYO OS-32 SUPER RADIO

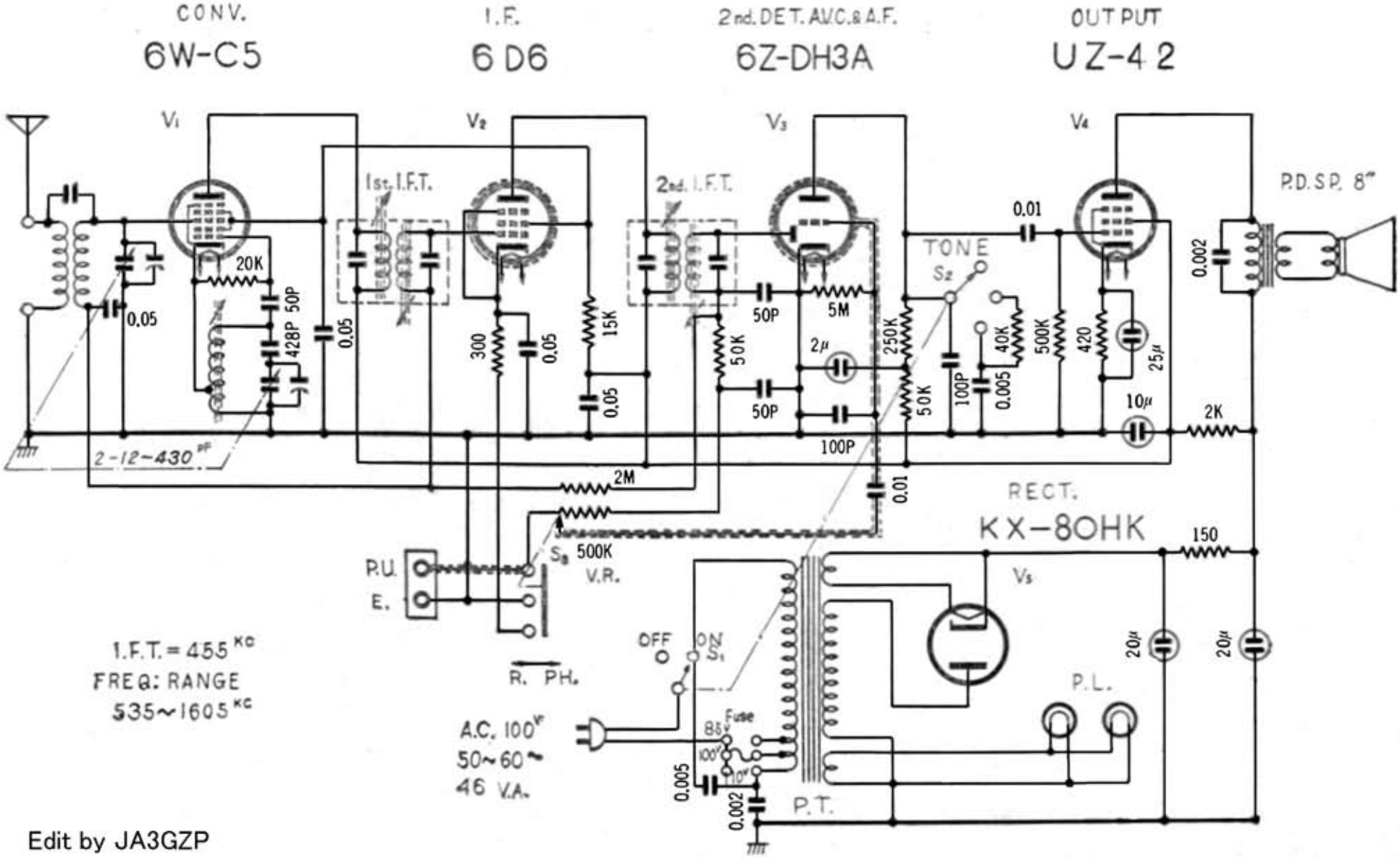

Edit by JA3GZP