RINCAN RADIO 5M-A2

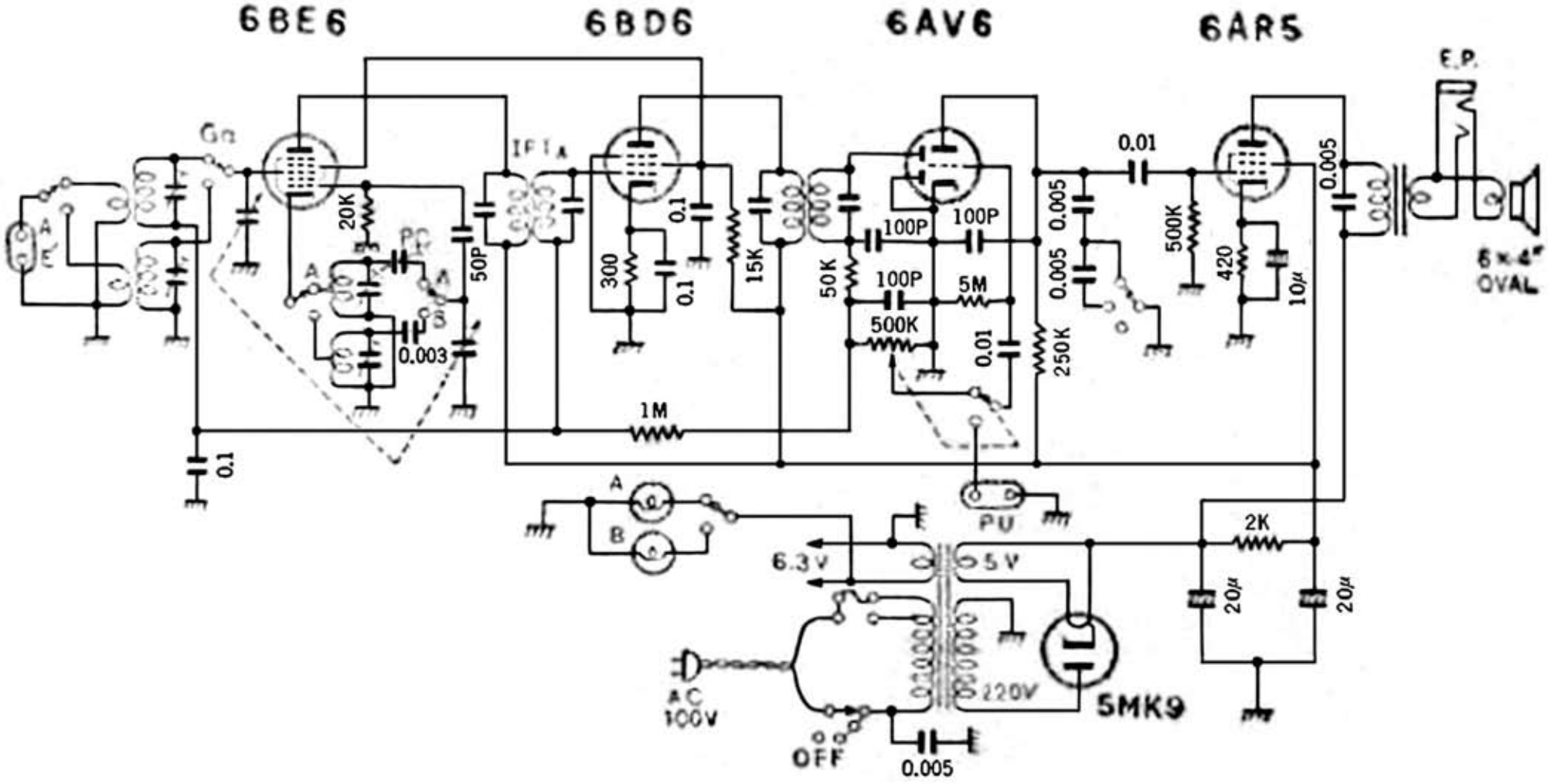

Edit by JA3GZP