RINCAN 5M-W1

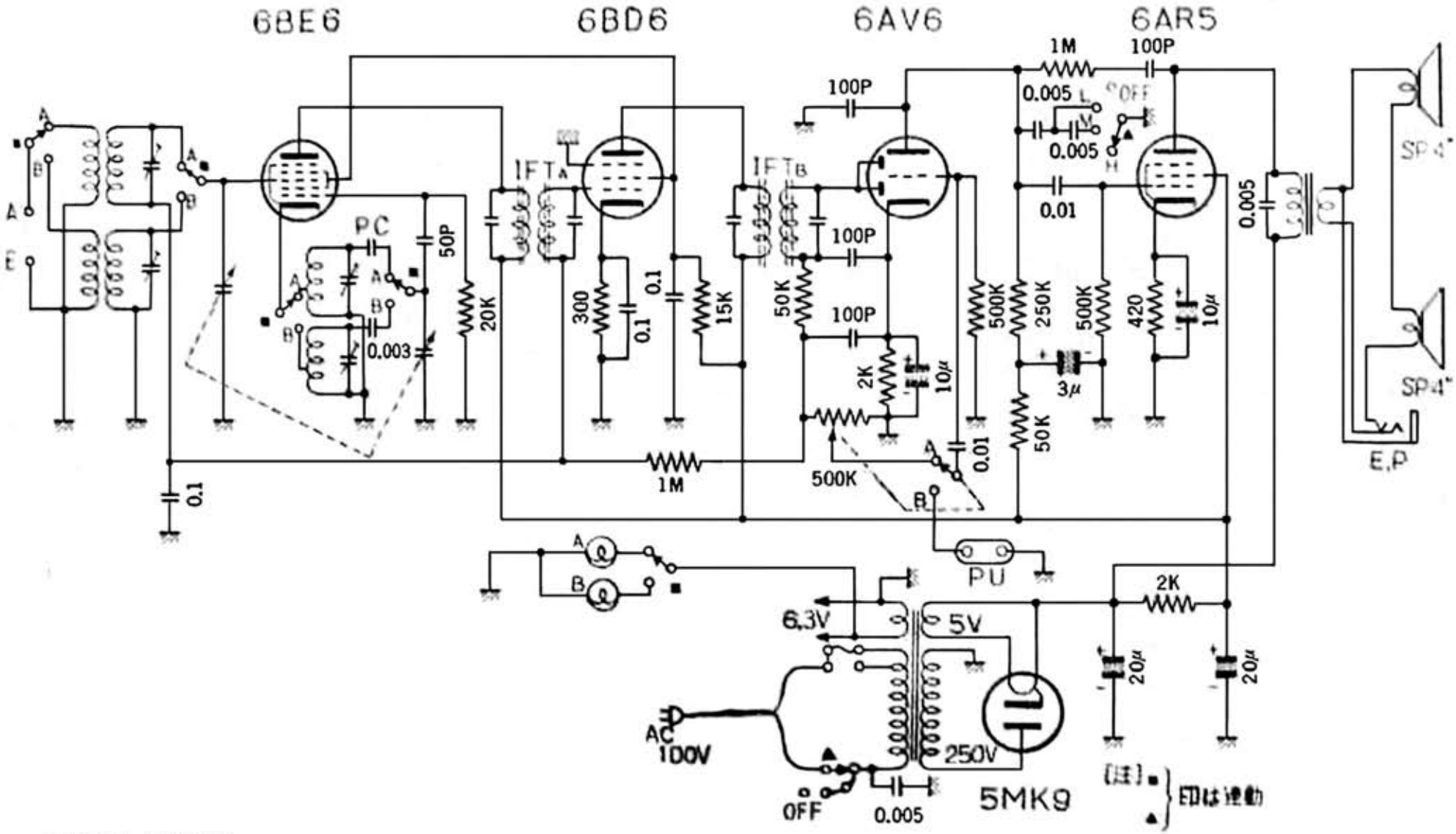

Edit by JA3GZP