RINCAN 5M - W2

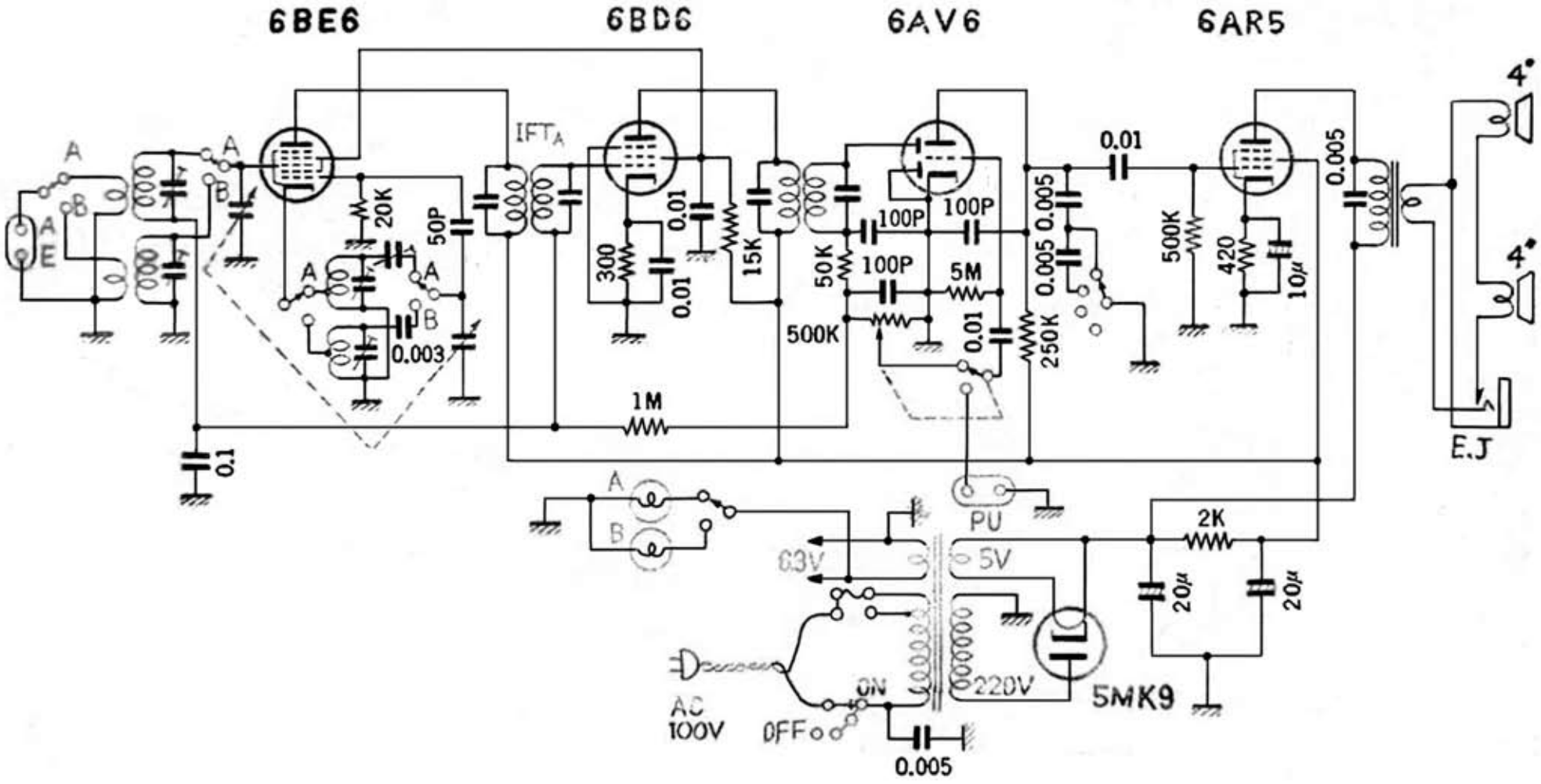

Edit by JA3GZP