Model SS-601 6-tube Super Heterodyne

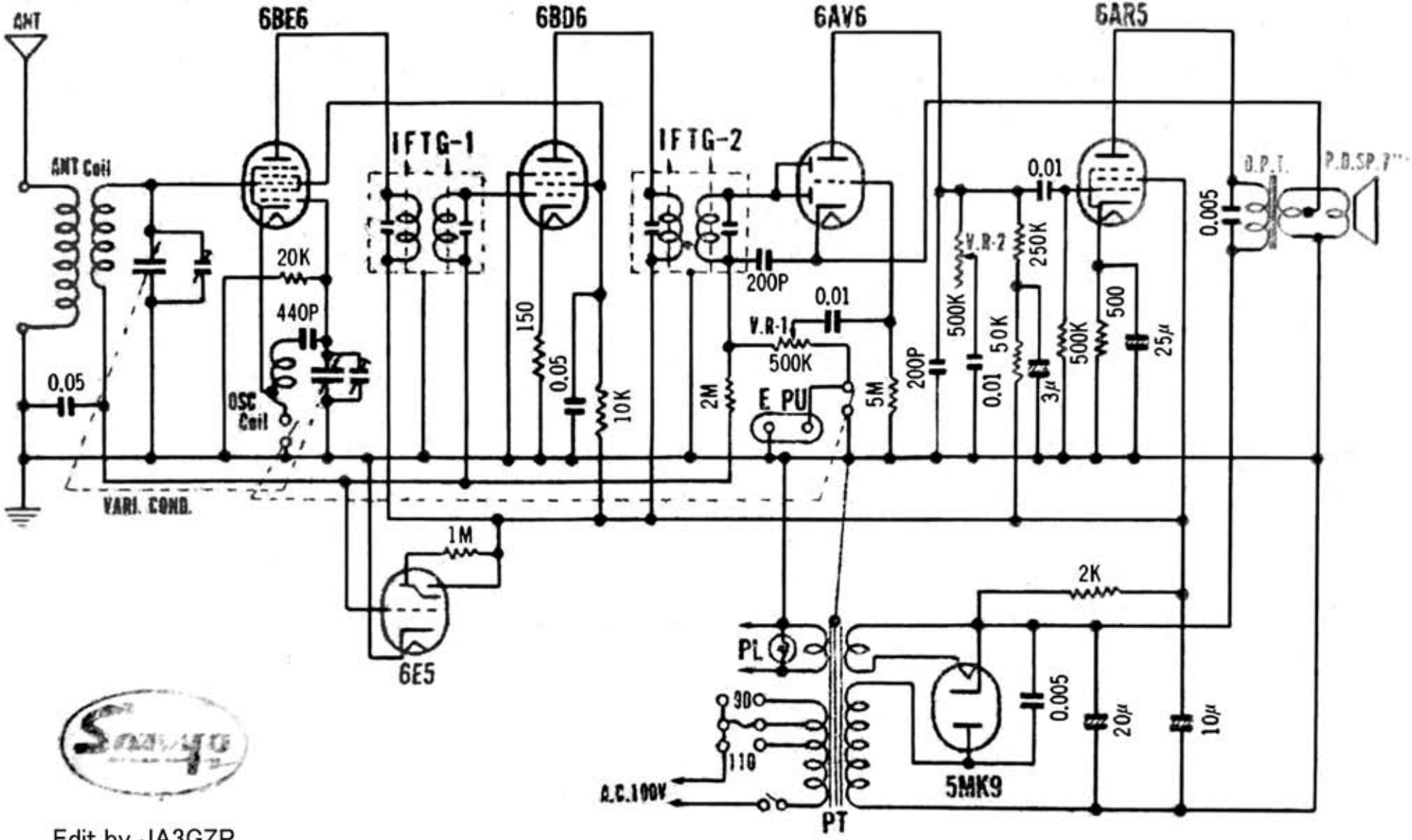

Edit by JA3GZP